Recursive tree processes and the mean-field limit of stochastic flows

Jan M. Swart (Czech Academy of Sciences)

joint with Tibor Mach (Prague) A. Sturm (Göttingen)

Thursday, January 30th, 2020

Cooperative branching

Let $S := \{0,1\}$. Consider the maps:

$$\mathtt{cob} : S^3 \to S \quad \text{with} \quad \mathtt{cob}(x_1, x_2, x_3) := x_1 \vee (x_2 \wedge x_3),$$
$$\mathtt{dth} : S^0 \to S \quad \text{with} \quad \mathtt{dth}(\varnothing) := 0.$$

Let $G = (V, E)$ be a graph.
Let $X = (X_t)_{t \geq 0}$ with $X_t = (X_t(i))_{i \in V}$ be a Markov process with state space S^V that evolves as follows:

- (*Cooperative branching*) For each $i \in V$, with Poisson rate α, we pick $i \sim j \sim k$, all different, at random and replace $X_t(i)$ by $\mathtt{cob}(X_t(i), X_t(j), X_t(k))$.
- (*death*) For each $i \in V$, with Poisson rate one, we replace $X_t(i)$ by $\mathtt{dth}(\varnothing) = 0$.

A graphical representation

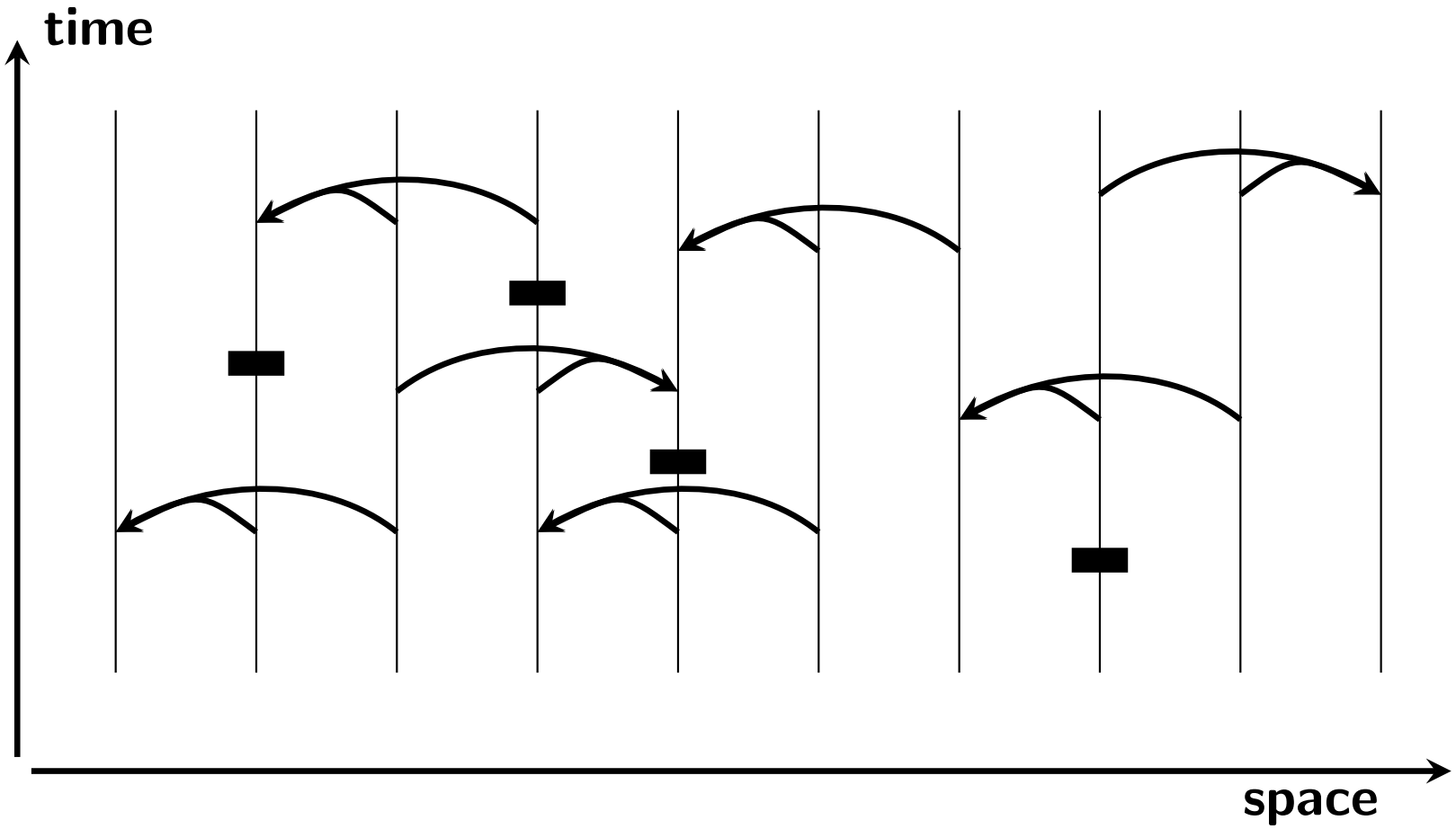

We denote `cob` and `dth` by suitable symbols.

A graphical representation

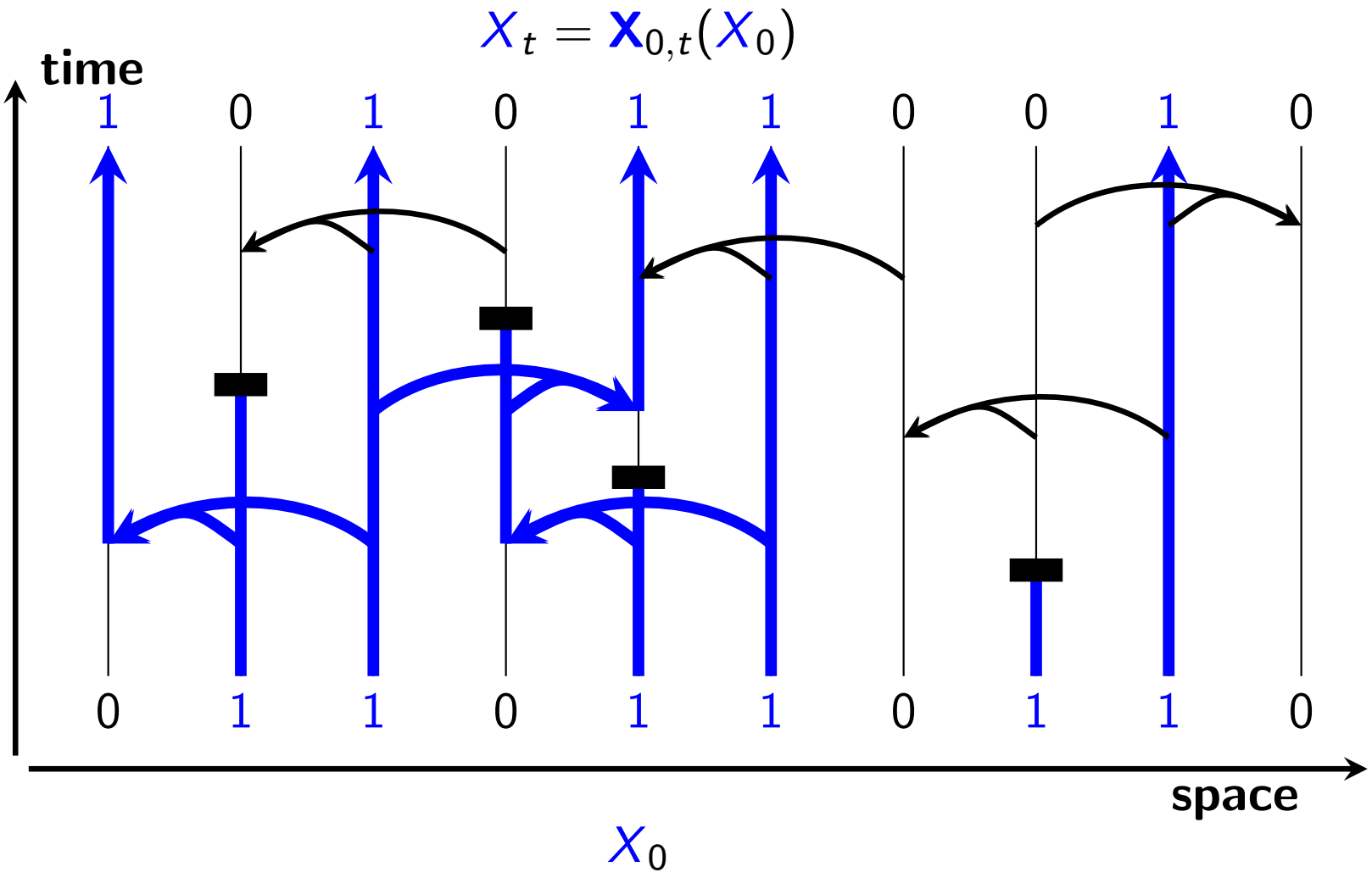

The Poisson events define a random map $x \mapsto \mathbf{X}_{0,t}(x)$.

A stochastic flow

The random maps $(\mathbf{X}_{s,t})_{s\leq t}$ form a *stochastic flow*

$$\mathbf{X}_{s,s} = 1 \quad \text{and} \quad \mathbf{X}_{t,u} \circ \mathbf{X}_{s,t} = \mathbf{X}_{s,u}$$

with *independent increments*, in the sense that

$$\mathbf{X}_{t_0,t_1}, \ldots, \mathbf{X}_{t_{n-1},t_n}$$

are independent for each $t_0 < \cdots < t_n$.

If X_0 is independent of $(\mathbf{X}_{s,t})_{s\leq t}$, then setting

$$X_t := \mathbf{X}_{0,t}(X_0) \qquad (t \geq 0)$$

defines a Markov process $(X_t)_{t\geq 0}$ with the right jump rates.

The mean-field limit

We are interested in the process on the *complete graph* with N vertices.

For any deterministic map $g : S^k \to S$, let us write

$$\mathbf{T}_g(\mu) := \text{ the law of } g(X_1, \ldots, X_k),$$

where $(X_i)_{i\geq 1}$ are i.i.d. with law μ.
In the limit $N \to \infty$, the empirical measure $\mu_t^N := \frac{1}{N}\sum_{i=1}^N \delta_{X_t(i)}$ solves

$$\tfrac{\partial}{\partial t}\mu_t = \alpha\big\{\mathbf{T}_{\mathtt{cob}}(\mu_t) - \mu_t\big\} + \big\{\mathbf{T}_{\mathtt{dth}}(\mu_t) - \mu_t\big\}.$$

Rewriting this in terms of $p_t := \mu_t(\{1\})$ yields

$$\tfrac{\partial}{\partial t}p_t = \alpha p_t^2(1-p_t) - p_t =: F_\alpha(p_t) \qquad (t \geq 0).$$

Cooperative branching

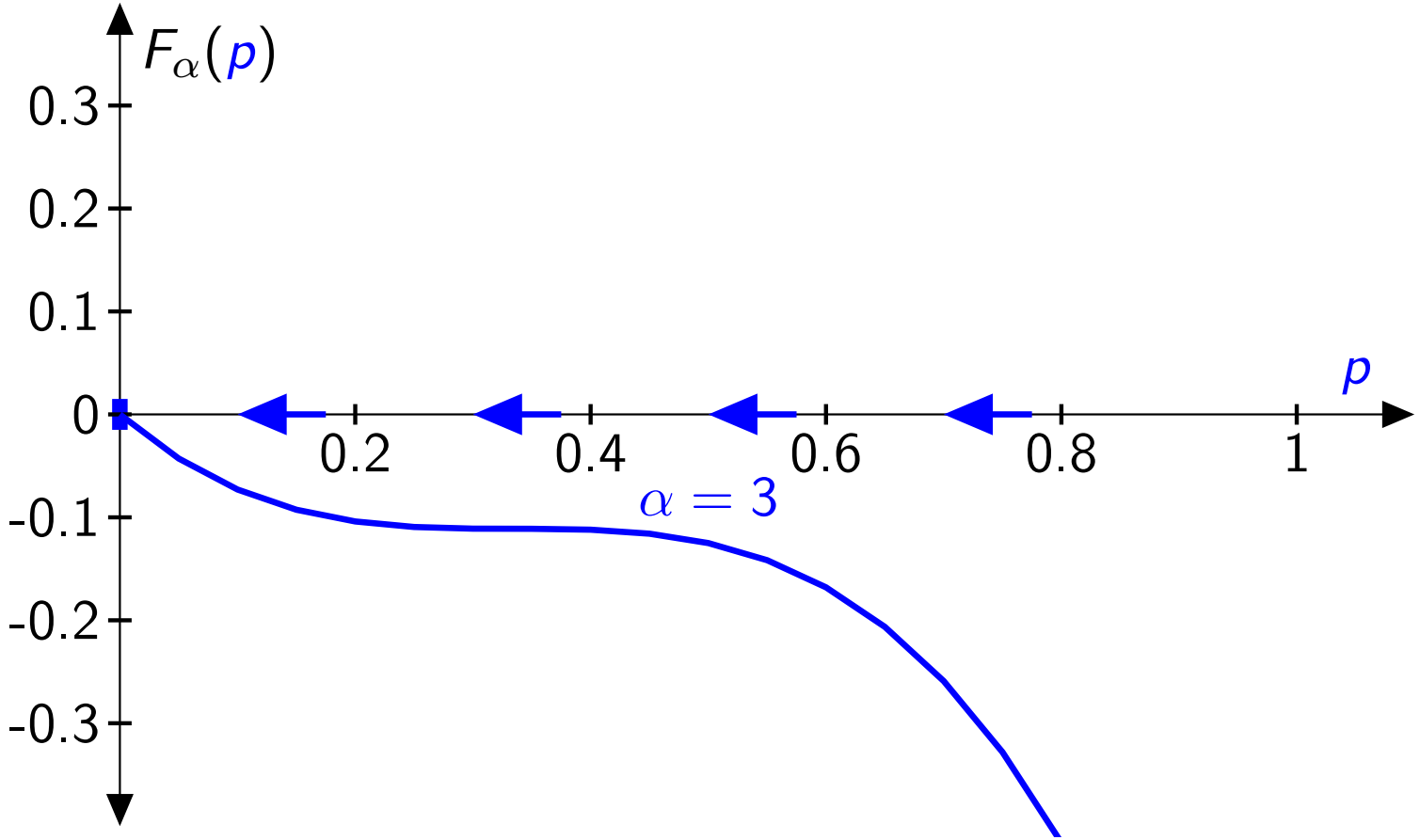

For $\alpha < 4$, the equation $\frac{\partial}{\partial t} p_t = F_\alpha(p_t)$ has a single, stable fixed point $p = 0$.

Cooperative branching

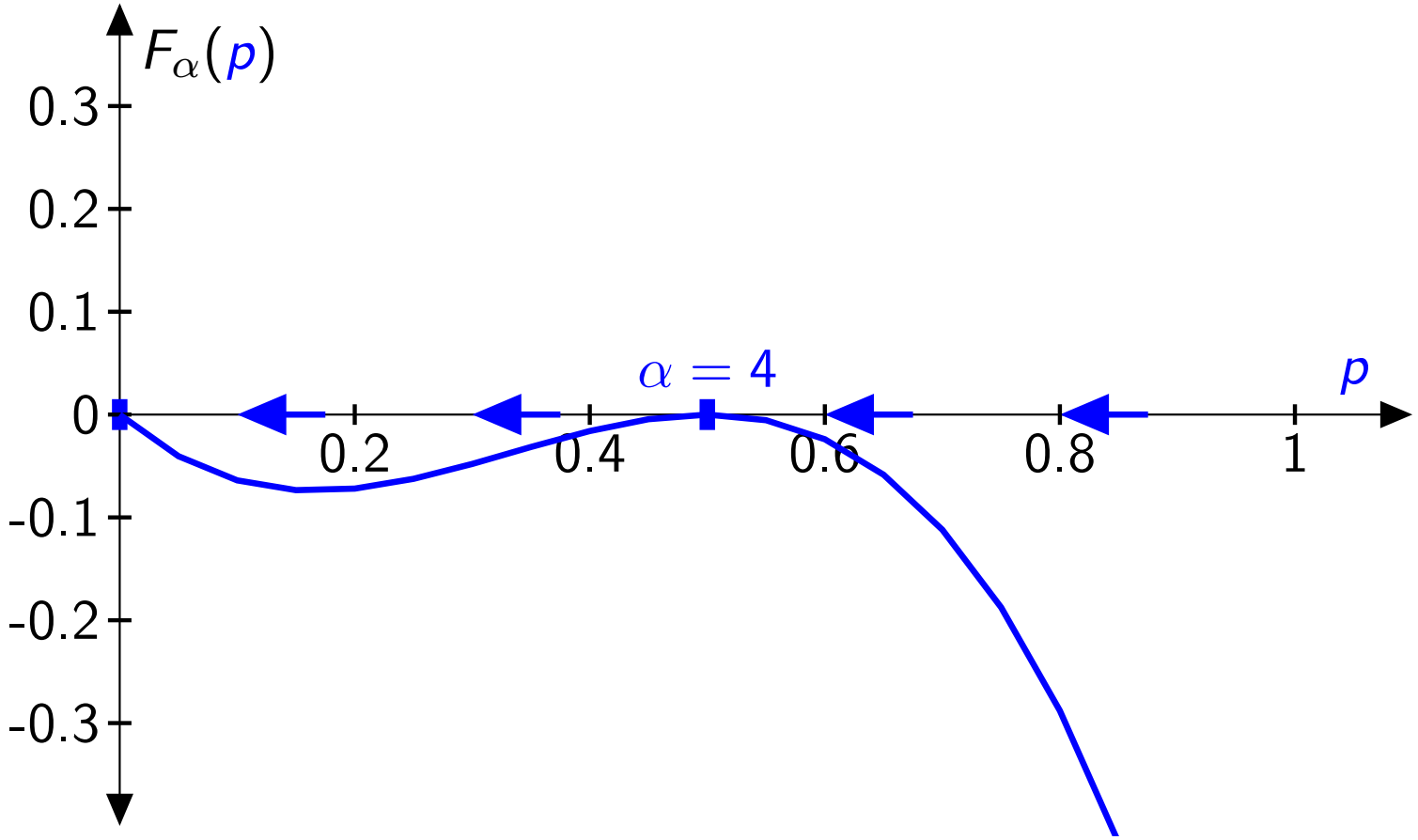

For $\alpha = 4$, a second fixed point appears at $p = 0.5$.

Cooperative branching

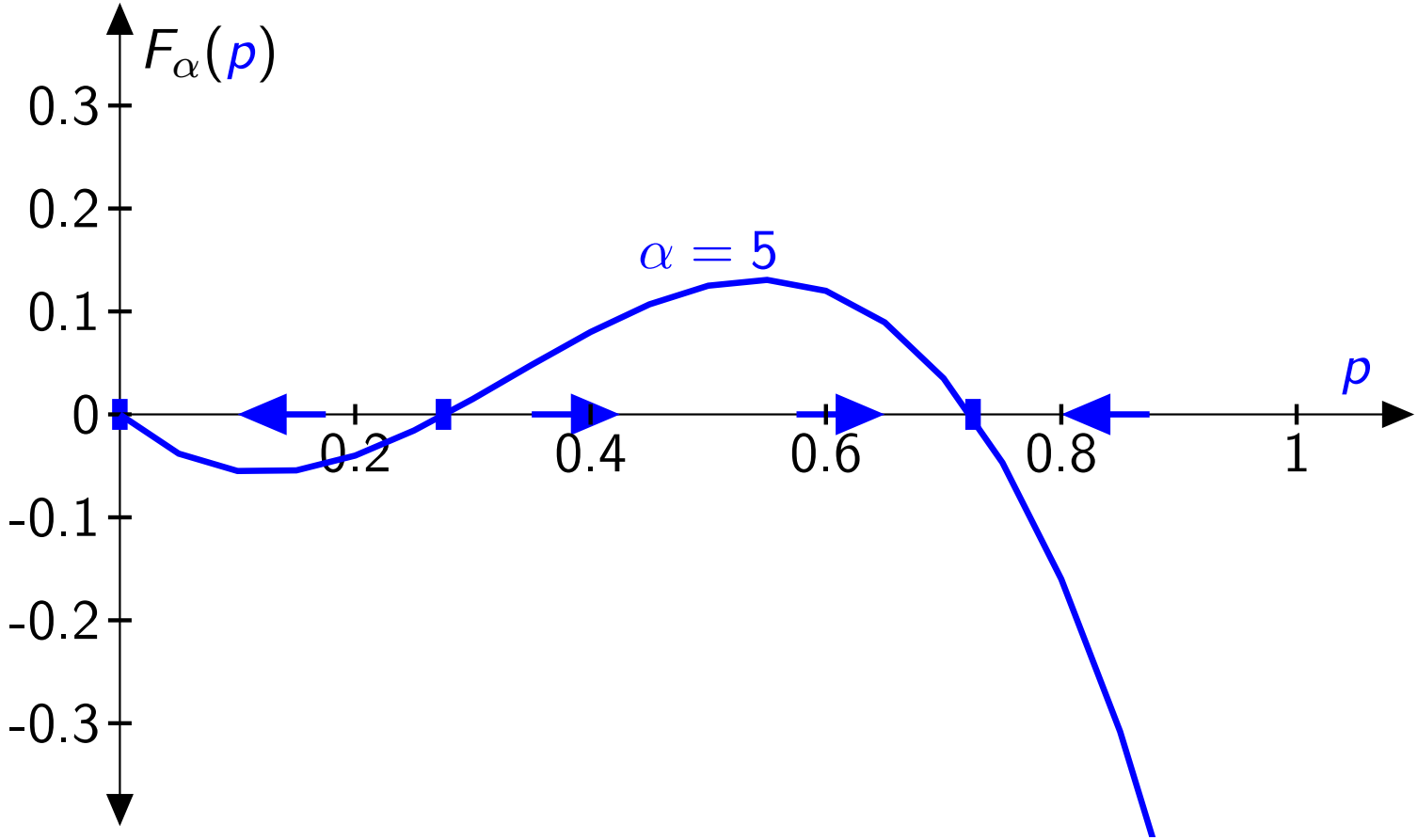

For $\alpha > 4$, there are two stable fixed points and one unstable fixed point, which separates the domains of attraction of the other two.

Cooperative branching

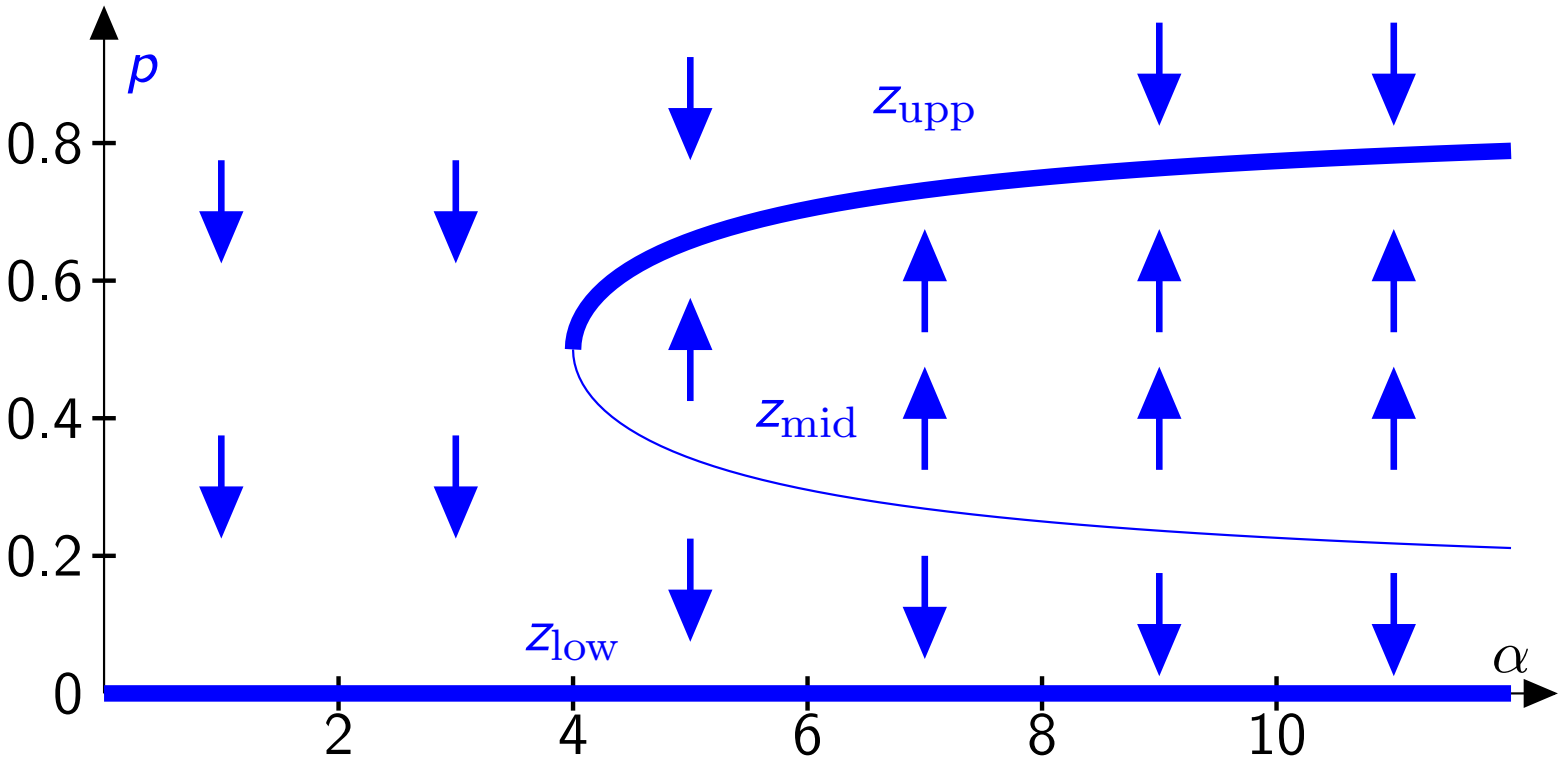

Fixed points of $\frac{\partial}{\partial t} p_t = F_\alpha(p_t)$ for different values of α.

The general set-up

(i) Polish space S *local state space.*

(ii) $(\Omega, \mathcal{B}, \mathbf{r})$ Polish space with Borel σ-field and finite measure: *source of external randomness.*

(iii) $\kappa : \Omega \to \mathbb{N}$ measurable function.

(iv) For each $\omega \in \Omega$, a measurable function $\gamma[\omega] : S^{\kappa(\omega)} \to S$.

Then the *mean-field equation* takes the form

$$\tfrac{\partial}{\partial t}\mu_t = \int_\Omega \mathbf{r}(\mathrm{d}\omega)\big\{\mathbf{T}_{\gamma[\omega]}(\mu_t) - \mu_t\big\} \qquad (t \geq 0). \tag{1}$$

In our example $S = \{0, 1\}$, $\Omega = \{1, 2\}$,

$$\gamma[1] = \mathtt{cob} : S^3 \to S, \qquad \kappa(1) = 3, \qquad \mathbf{r}(\{1\}) = \alpha,$$
$$\gamma[2] = \mathtt{dth} : S^0 \to S, \qquad \kappa(2) = 0, \qquad \mathbf{r}(\{2\}) = 1.$$

The mean-field equation

Theorem [Mach, Sturm, S. '18] Assume that

$$\int_\Omega \mathbf{r}(\mathrm{d}\omega)\,\kappa(\omega) < \infty \tag{2}$$

Then for each initial state, the mean-field equation (1) has a unique solution.

Define a (nonlinear) semigroup $(\mathbf{T}_t)_{t\geq 0}$ of operators acting on probability measures by

$$\mathbf{T}_t(\mu) := \mu_t \quad \text{where } (\mu_t)_{t\geq 0} \text{ solves (1) with } \mu_0 = \mu.$$

Proposition [Mach, Sturm, S. '18] Assume that $\forall k$, $x \in S^k$

$$\mathbf{r}\big(\{\omega : \kappa(\omega) = k,\ \gamma[\omega] \text{ is discontinuous at x}\}\big) = 0. \tag{3}$$

Then the operators $\mathbf{T}_t$ are continuous w.r.t. weak convergence.

The mean-field equation

Let $\mu_t^N := \frac{1}{N}\sum_{i=1}^N \delta_{X_t(i)}$ denote the empirical measure.
Let d be any metric that generates the topology of weak convergence and let $\|\cdot\|$ denote the total variation norm.

Theorem [Mach, Sturm, S. '18] Assume (2) and at least one of the following conditions:

(i) $\mathbb{P}\big[d(\mu_0^N, \mu_0) \geq \varepsilon\big] \underset{N\to\infty}{\longrightarrow} 0$ for all $\varepsilon > 0$, and (3) holds.

(ii) $\big\|\mathbb{E}[(\mu_0^N)^{\otimes n}] - \mu_0^{\otimes n}\big\| \underset{N\to\infty}{\longrightarrow} 0$ for all $n \geq 1$.

Then

$$\mathbb{P}\big[\sup_{0\leq t\leq T} d\big(\mu_t^N, \mathbf{T}_t(\mu_0)\big) \geq \varepsilon\big] \underset{N\to\infty}{\longrightarrow} 0 \qquad (\varepsilon > 0,\ T < \infty).$$

The mean-field limit of the stochastic flow

Question

What is the mean-field limit of the stochastic flow $(\mathbf{X}_{s,t})_{s\leq t}$?

Fix $d \in \mathbb{N}_+ \cup \{\infty\}$ such that $\kappa(\omega) \leq d$ for all $\omega \in \Omega$. Let $\mathbb{T} = \mathbb{T}^d$ denote the space of all words $\mathbf{i} = i_1 \cdots i_n$ made from the alphabet $\{1, \ldots, d\}$ (if $d < \infty$) resp. $\mathbb{N}_+$ (if $d = \infty$).

A recursive tree representation

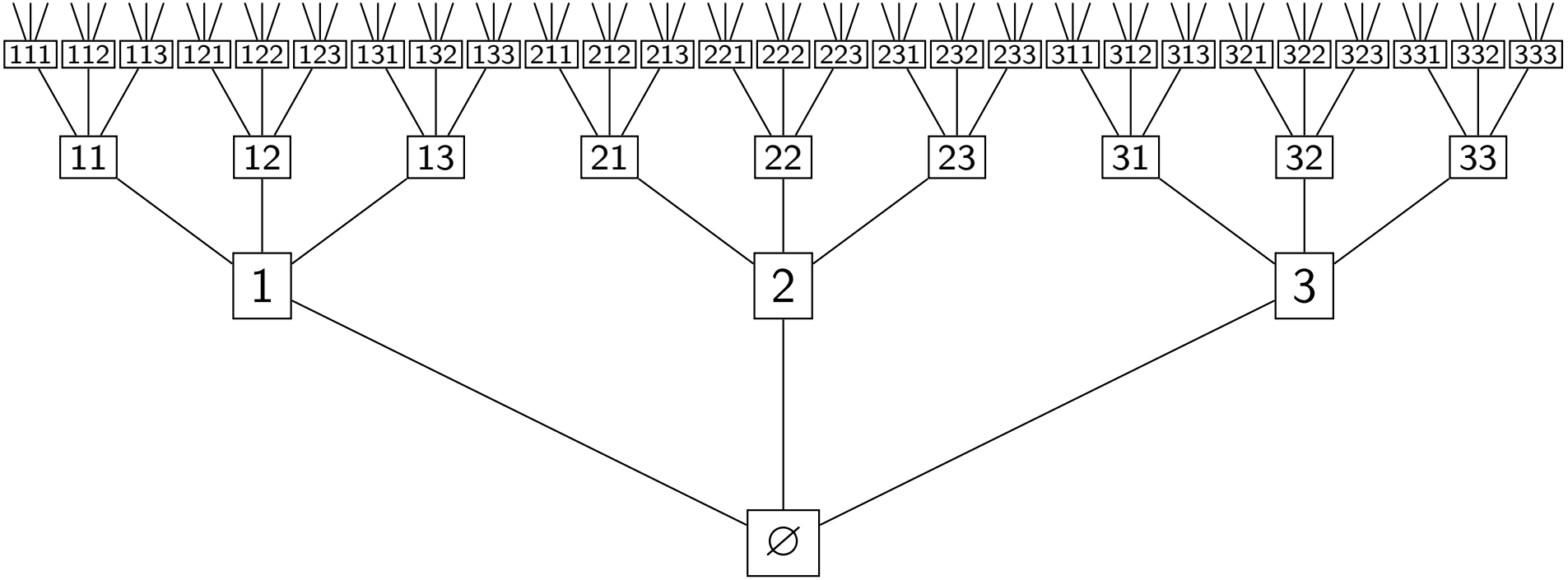

We view $\mathbb{T} = \mathbb{T}^d$ as a tree with root $\varnothing$, the word of length zero.

A recursive tree representation

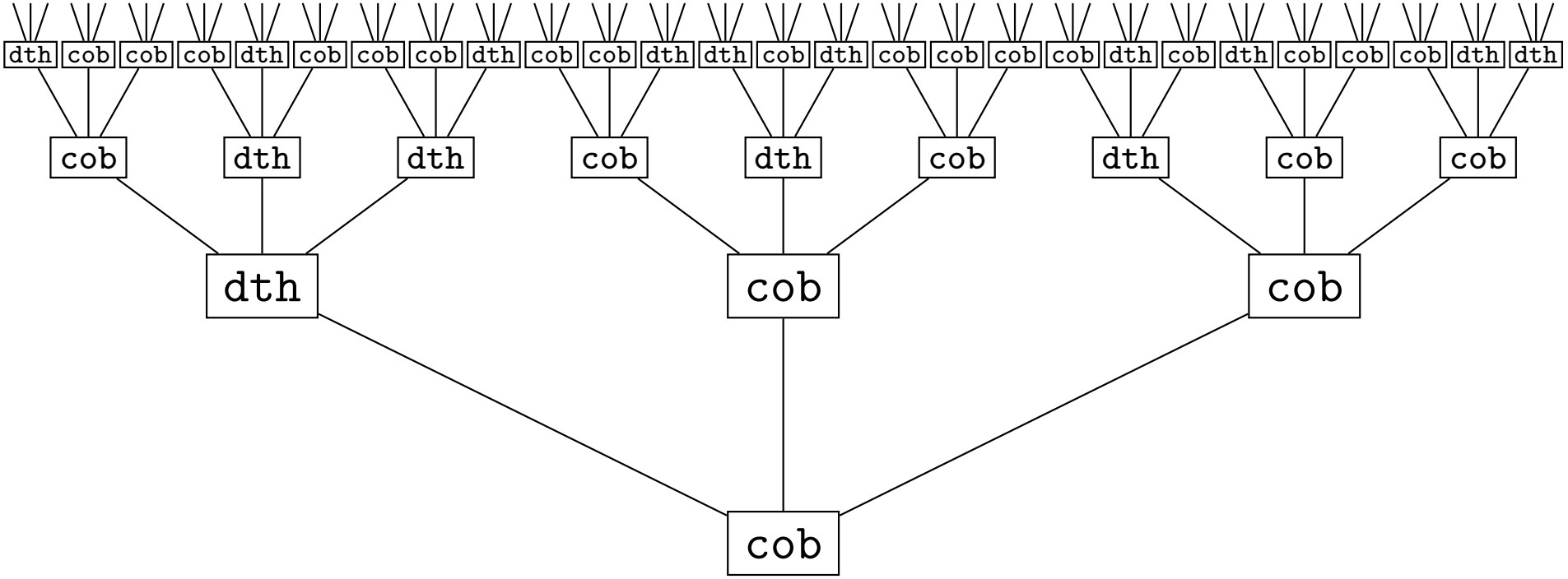

We attach i.i.d. $(\boldsymbol{\omega}_{\mathbf{i}})_{\mathbf{i}\in\mathbb{T}}$ with law $|\mathbf{r}|^{-1}\mathbf{r}$ to each node, which translate into maps $(\gamma[\boldsymbol{\omega}_{\mathbf{i}}])_{\mathbf{i}\in\mathbb{T}}$.

A recursive tree representation

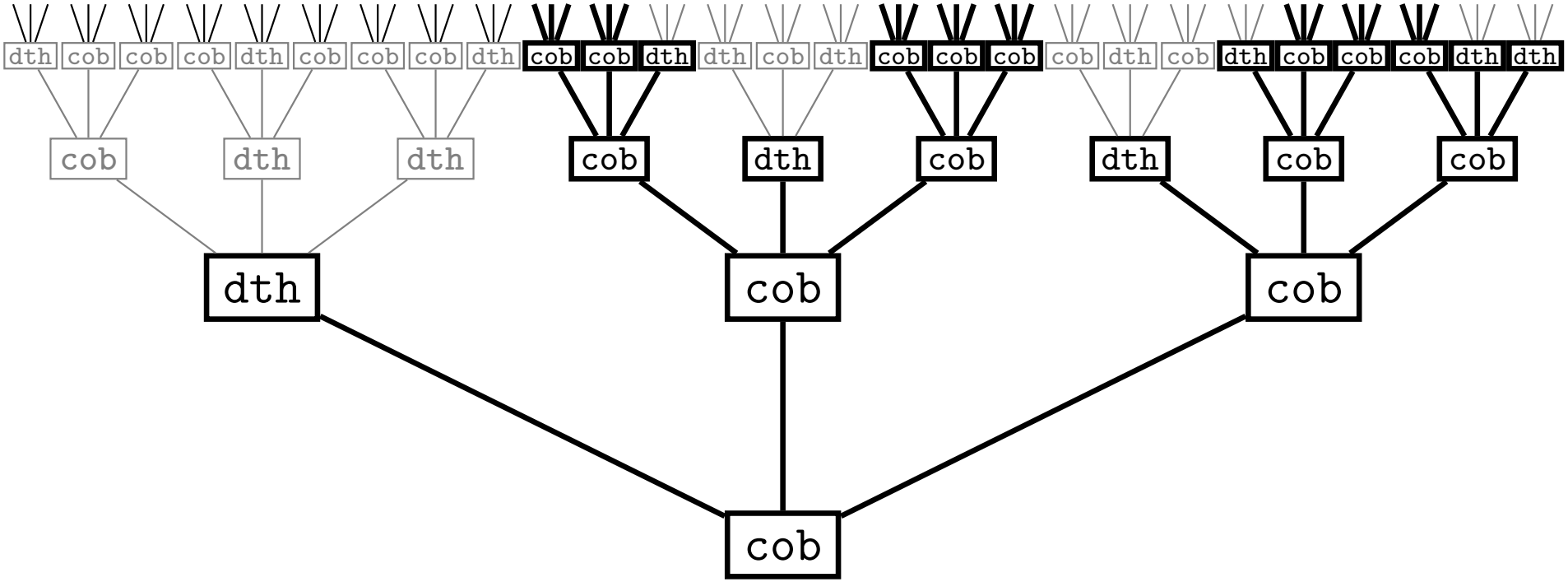

Let $\mathbb{S}$ be the random subtree of $\mathbb{T}$ defined as

$$\mathbb{S} := \left\{ i_1 \cdots i_n \in \mathbb{T} : i_m \leq \kappa(\boldsymbol{\omega}_{i_1 \cdots i_{m-1}}) \ \forall 1 \leq m \leq n \right\}.$$

A recursive tree representation

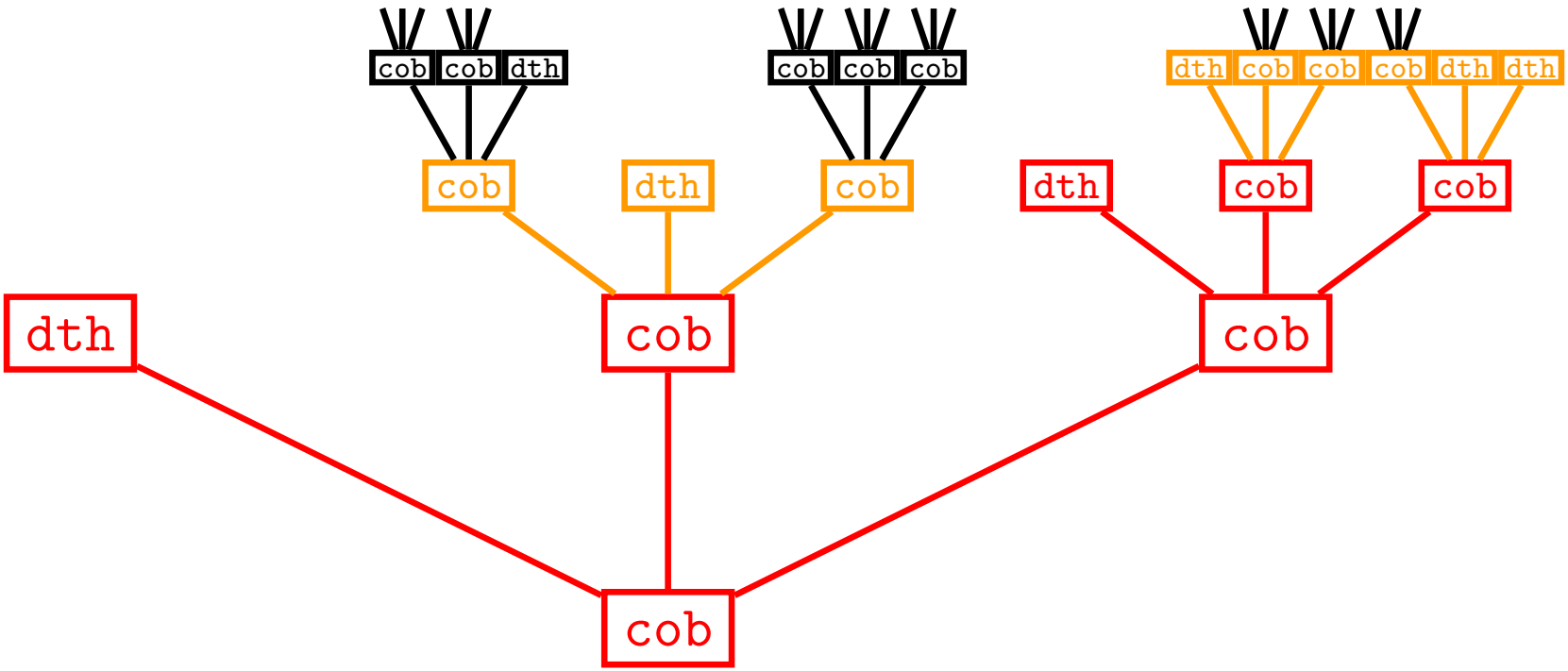

For any rooted subtree $\mathbb{U} \subset \mathbb{S}$, let

$$\nabla\mathbb{U} := \left\{ i_1 \cdots i_n \in \mathbb{S} : i_1 \cdots i_{n-1} \in \mathbb{U},\ i_1 \cdots i_n \notin \mathbb{U} \right\}$$

denote the boundary of $\mathbb{U}$ relative to $\mathbb{S}$.

A recursive tree representation

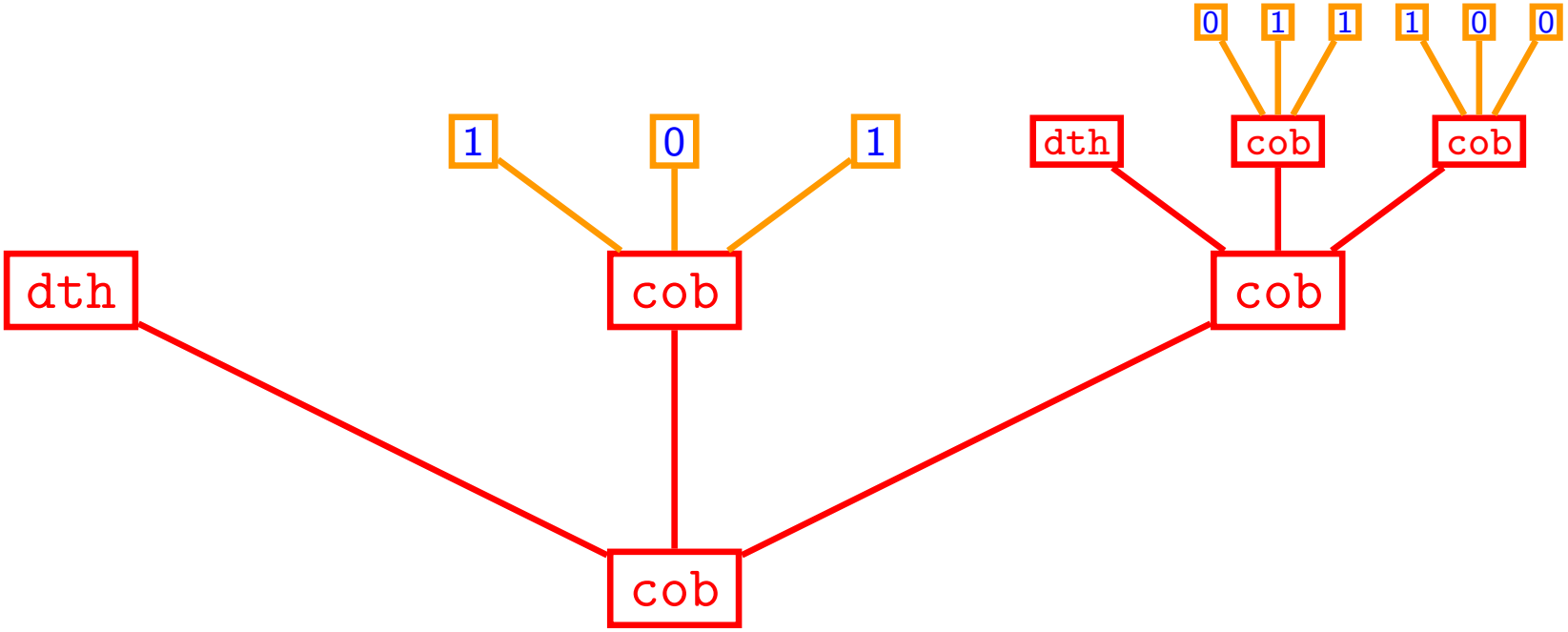

Given $(X_{\mathbf{i}})_{\mathbf{i}\in\nabla\mathbb{U}}$, we inductively define $(X_{\mathbf{i}})_{\mathbf{i}\in\mathbb{U}}$ by

$$X_{\mathbf{i}} = \gamma[\omega_{\mathbf{i}}]\big(X_{\mathbf{i}1},\ldots,X_{\mathbf{i}\kappa(\omega)}\big) \qquad (\mathbf{i}\in\mathbb{U}).$$

A recursive tree representation

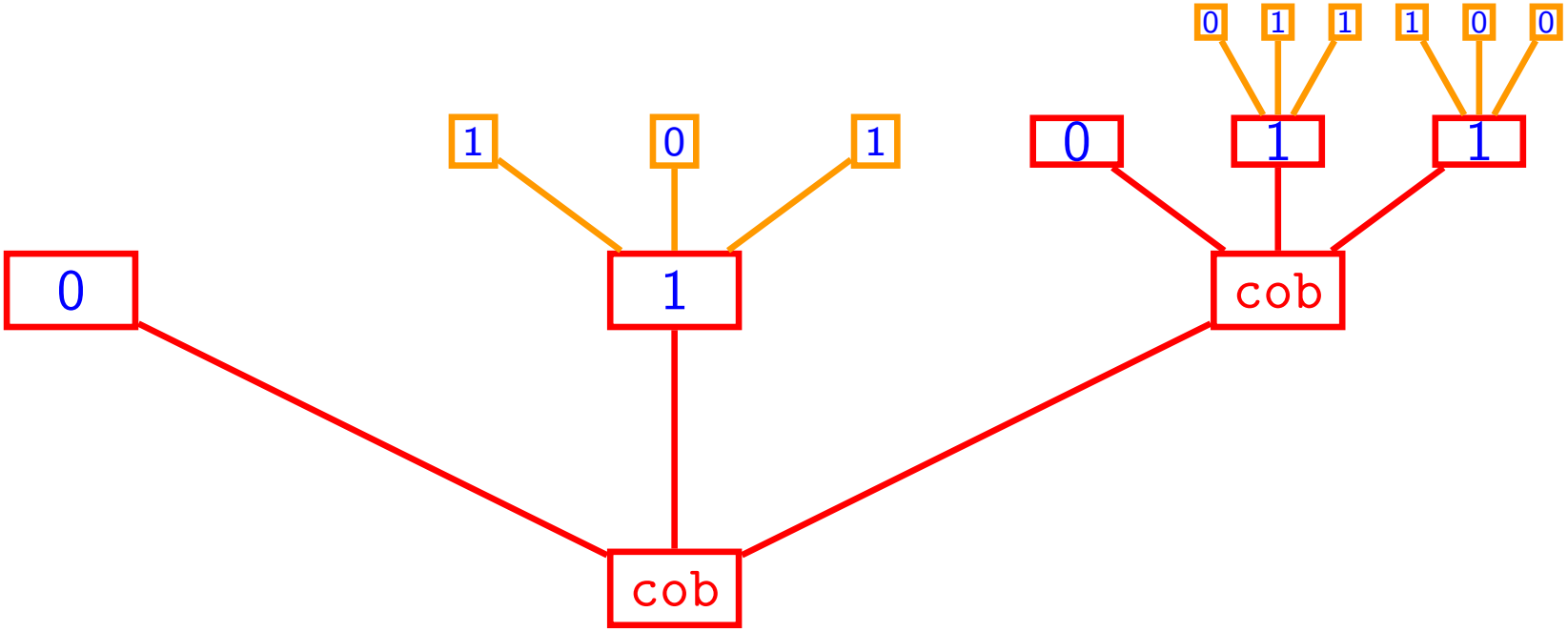

Given $(X_{\mathbf{i}})_{\mathbf{i}\in\nabla\mathbb{U}}$, we inductively define $(X_{\mathbf{i}})_{\mathbf{i}\in\mathbb{U}}$ by

$$X_{\mathbf{i}} = \gamma[\omega_{\mathbf{i}}]\big(X_{\mathbf{i}1},\ldots,X_{\mathbf{i}\kappa(\omega)}\big) \qquad (\mathbf{i}\in\mathbb{U}).$$

A recursive tree representation

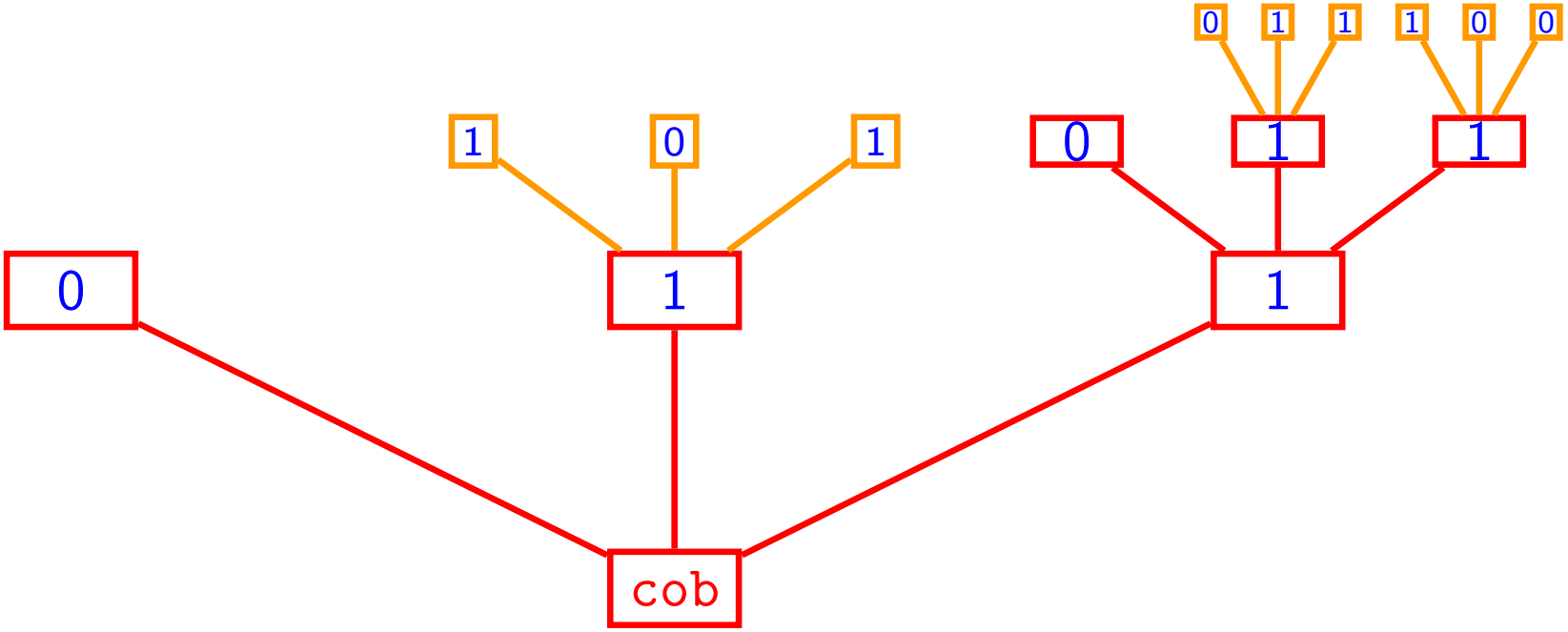

Given $(X_{\mathbf{i}})_{\mathbf{i}\in\nabla\mathbb{U}}$, we inductively define $(X_{\mathbf{i}})_{\mathbf{i}\in\mathbb{U}}$ by

$$X_{\mathbf{i}} = \gamma[\omega_{\mathbf{i}}]\big(X_{\mathbf{i}1},\ldots,X_{\mathbf{i}\kappa(\omega)}\big) \qquad (\mathbf{i}\in\mathbb{U}).$$

A recursive tree representation

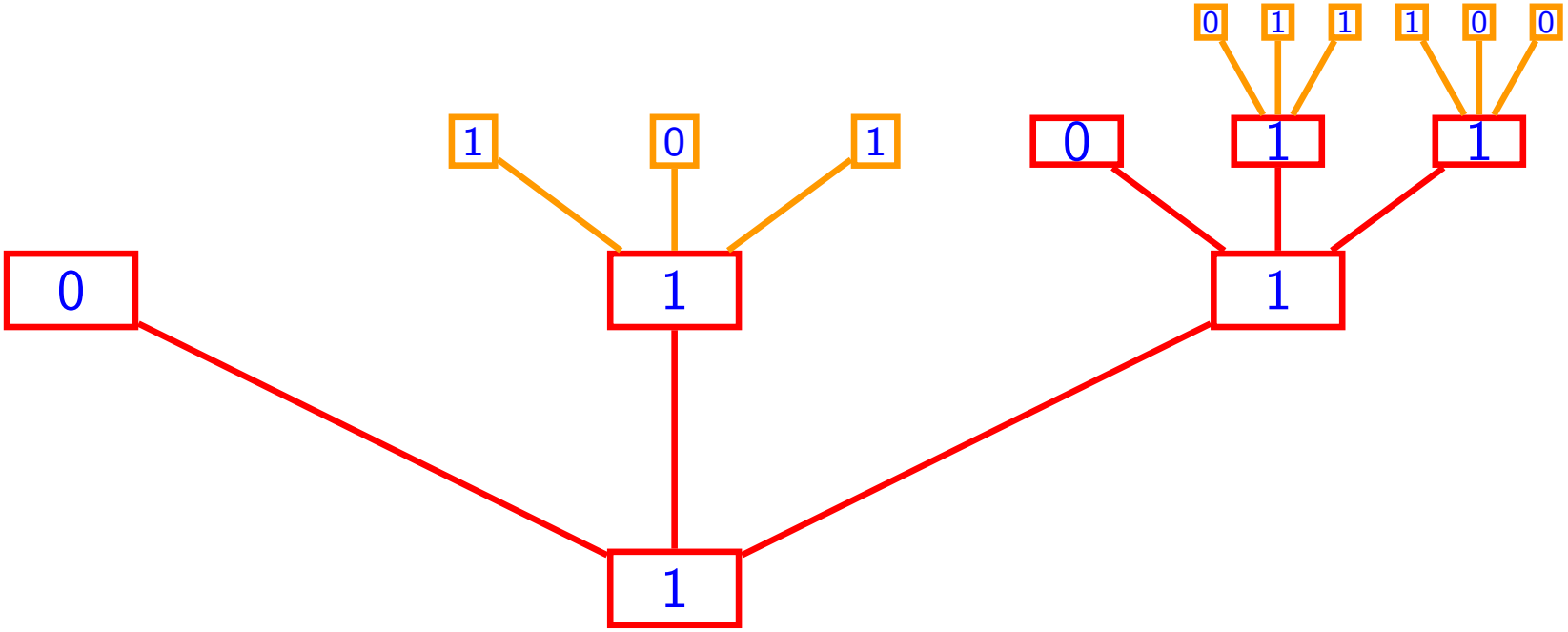

Given $(X_{\mathbf{i}})_{\mathbf{i}\in\nabla\mathbb{U}}$, we inductively define $(X_{\mathbf{i}})_{\mathbf{i}\in\mathbb{U}}$ by

$$X_{\mathbf{i}} = \gamma[\omega_{\mathbf{i}}]\big(X_{\mathbf{i}1},\ldots,X_{\mathbf{i}\kappa(\omega)}\big) \qquad (\mathbf{i}\in\mathbb{U}).$$

A recursive tree representation

Define $G_{\mathbb{U}} : S^{\nabla\mathbb{U}} \to S$ by $G_{\mathbb{U}}\big((X_{\mathbf{i}})_{\mathbf{i}\in\nabla\mathbb{U}}\big) := X_{\varnothing}$.

$G_{\mathbb{U}}$ is the concatenation of the maps $\big(\gamma[\omega_{\mathbf{i}}]\big)_{\mathbf{i}\in\mathbb{U}}$ according to the tree structure of $\mathbb{U}$.

Let $|i_1 \cdots i_n| := n$ denote the length of a word $\mathbf{i}$ and set

$$\mathbb{S}_{(n)} := \{\mathbf{i} \in \mathbb{S} : |\mathbf{i}| < n\} \quad \text{and} \quad \nabla\mathbb{S}_{(n)} = \{\mathbf{i} \in \mathbb{S} : |\mathbf{i}| = n\}.$$

Aldous and Bandyopadyay (2005) observed that

$$\mathbf{T}^n(\mu) := \text{ the law of } G_{\mathbb{S}_{(n)}}\big((X_{\mathbf{i}})_{\mathbf{i}\in\nabla\mathbb{S}_{(n)}}\big),$$

where $(X_{\mathbf{i}})_{\mathbf{i}\in\nabla\mathbb{S}_{(n)}}$ are i.i.d. with law μ and independent of $(\omega_{\mathbf{i}})_{\mathbf{i}\in\mathbb{S}_{(n)}}$, and

$$\mathbf{T}(\mu) := |\mathbf{r}|^{-1} \int_{\Omega} \mathbf{r}(\mathrm{d}\omega)\mathbf{T}_{\gamma[\omega]}(\mu).$$

A recursive tree representation

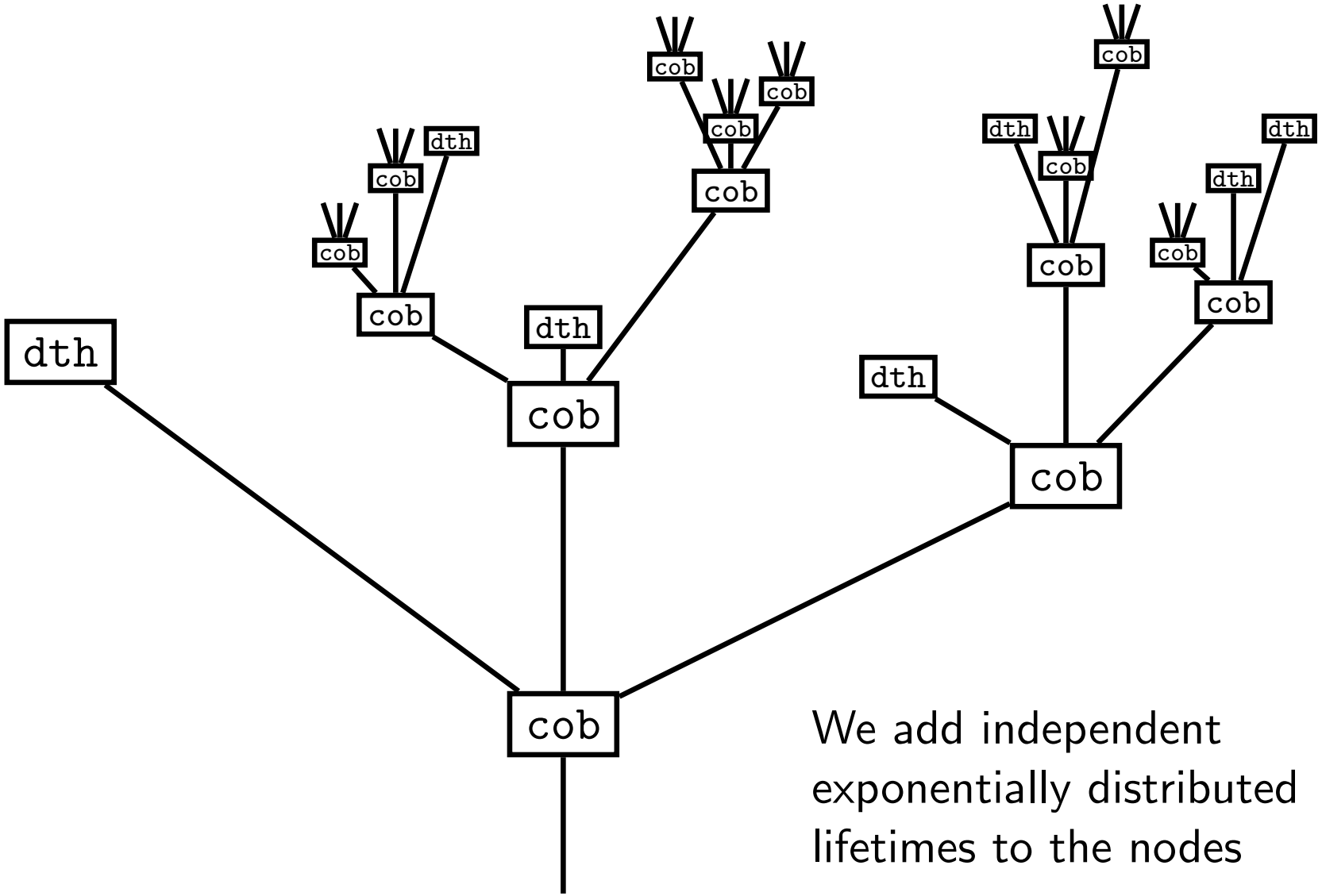

We add independent exponentially distributed lifetimes to the nodes

A recursive tree representation

Let $(\sigma_{\mathbf{i}})_{\mathbf{i}\in\mathbb{T}}$ be i.i.d. exponentially distributed with mean $|\mathbf{r}|^{-1}$, independent of $(\omega_{\mathbf{i}})_{\mathbf{i}\in\mathbb{T}}$, and set

$$\tau_{\mathbf{i}}^* := \sum_{m=1}^{n-1} \sigma_{i_1\cdots i_m} \quad \text{and} \quad \tau_{\mathbf{i}}^\dagger := \tau_{\mathbf{i}}^* + \sigma_{\mathbf{i}} \qquad (\mathbf{i} = i_1 \cdots i_n),$$

$$\mathbb{S}_t := \{\mathbf{i} \in \mathbb{S} : \tau_{\mathbf{i}}^\dagger \leq t\} \quad \text{and} \quad \nabla\mathbb{S}_t = \{\mathbf{i} \in \mathbb{S} : \tau_{\mathbf{i}}^* \leq t < \tau_{\mathbf{i}}^\dagger\}.$$

Let $\mathcal{F}_t$ be the filtration

$$\mathcal{F}_t := \sigma\big(\nabla\mathbb{S}_t, (\omega_{\mathbf{i}}, \sigma_{\mathbf{i}})_{\mathbf{i}\in\mathbb{S}_t}\big) \qquad (t \geq 0).$$

Theorem [Mach, Sturm, S. '18]

$$\mathbf{T}_t(\mu) := \text{ the law of } G_{\mathbb{S}_t}\big((X_{\mathbf{i}})_{\mathbf{i}\in\nabla\mathbb{S}_t}\big),$$

where $(X_{\mathbf{i}})_{\mathbf{i}\in\nabla\mathbb{S}_t}$ are i.i.d. with law μ and independent of $\mathcal{F}_t$.

A recursive tree representation

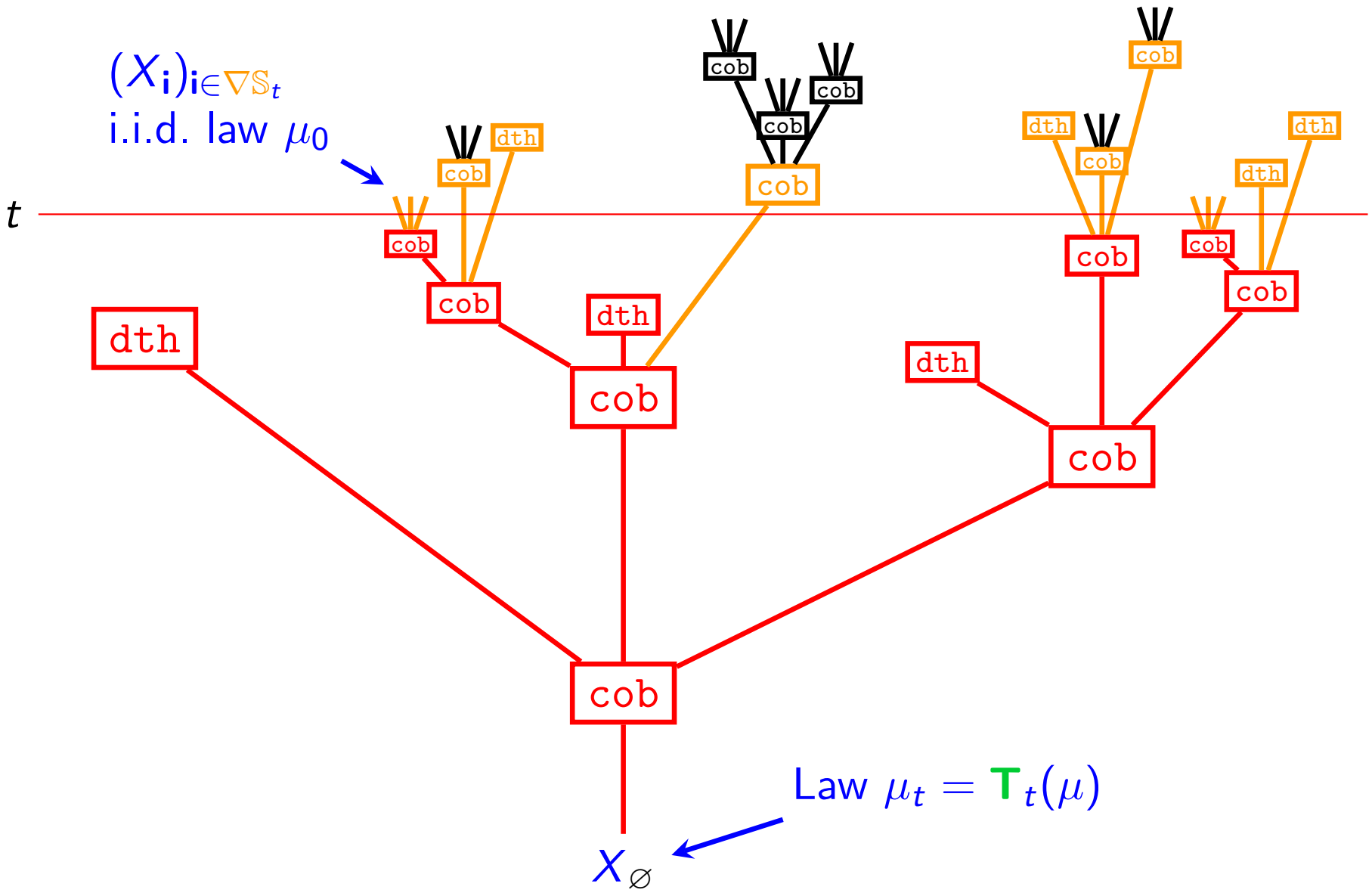

Recursive Tree Processes

A *Recursive Distributional Equation* is an equation of the form

$$X \stackrel{\mathrm{d}}{=} \gamma[\omega](X_1, \ldots, X_{\kappa(\omega)}) \qquad \text{(RDE)},$$

where $X_1, X_2, \ldots$ are i.i.d. copies of X, independent of ω.

A law ν solves (RDE) iff

$$\text{(i)} \quad \mathbf{T}_t(\nu) = \nu \quad (t \geq 0) \qquad \text{or} \qquad \text{(ii)} \quad \mathbf{T}(\nu) = \nu.$$

We can view ν as the "invariant law" of a "Markov chain" where time has a tree-like structure.

In our example, solutions to the RDE are the Bernoulli distributions ν_{low}, ν_{mid}, ν_{upp} with density z_{low}, z_{mid}, z_{upp}.

Recursive Tree Processes

For any rooted subtree $\mathbb{U} \subset \mathbb{T}$, let

$$\partial\mathbb{U} := \{i_1 \cdots i_n \in \mathbb{T} : i_1 \cdots i_{n-1} \in \mathbb{U},\ i_1 \cdots i_n \notin \mathbb{U}\}$$

denote the boundary of $\mathbb{U}$ relative to $\mathbb{T}$.

For each solution ν of (RDE), there exists a *Recursive Tree Process (RTP)* $(\boldsymbol{\omega}_{\mathbf{i}}, \mathbf{X}_{\mathbf{i}})_{\mathbf{i}\in\mathbb{T}}$, unique in law, such that:

(i) $(\boldsymbol{\omega}_{\mathbf{i}})_{\mathbf{i}\in\mathbb{T}}$ are i.i.d. with law $|\mathbf{r}|^{-1}\mathbf{r}$.

(ii) For finite $\mathbb{U} \subset \mathbb{T}$, the r.v.'s $(\mathbf{X}_{\mathbf{i}})_{\mathbf{i}\in\partial\mathbb{U}}$ are i.i.d. with ν and independent of $(\boldsymbol{\omega}_{\mathbf{i}})_{\mathbf{i}\in\mathbb{U}}$.

(iii) $\mathbf{X}_{\mathbf{i}} = \gamma[\boldsymbol{\omega}_{\mathbf{i}}]\big(\mathbf{X}_{\mathbf{i}1}, \ldots, \mathbf{X}_{\mathbf{i}\kappa(\boldsymbol{\omega}_{\mathbf{i}})}\big) \qquad (\mathbf{i} \in \mathbb{T})$.

If we add independent exponentially distributed lifetimes, then:

- Conditional on $\mathcal{F}_t$, the r.v.'s $(\mathbf{X}_{\mathbf{i}})_{\mathbf{i}\in\nabla\mathbb{S}_t}$ are i.i.d. with law ν.

Endogeny

Let $(\omega_{\mathbf{i}}, \mathbf{X}_{\mathbf{i}})_{\mathbf{i}\in\mathbb{T}}$ be the RTP corresponding to a solution ν of the RDE.

Aldous and Bandyopadyay (2005) say that an RTP is *endogenous* if

$$\mathbf{X}_{\varnothing} \text{ is measurable w.r.t. the } \sigma\text{-field generated by } (\omega_{\mathbf{i}})_{\mathbf{i}\in\mathbb{T}}.$$

Define $\mathbf{j}$ is *pivotal* if

$$G_{\mathbb{U}}\big(X_{\mathbf{j}}, (X_{\mathbf{i}})_{\mathbf{i}\in\nabla\mathbb{U}\setminus\{\mathbf{j}\}}\big) \neq G_{\mathbb{U}}\big(x, (X_{\mathbf{i}})_{\mathbf{i}\in\nabla\mathbb{U}\setminus\{\mathbf{j}\}}\big).$$

For some $x \neq X_{\mathbf{j}}$ and $\mathbb{U}$ such that $\mathbf{j} \in \nabla\mathbb{U}$.

Johnson, Podder & Skerman (2018) observe that

$$J_n := \big\{\mathbf{j} \in \nabla\mathbb{S}_{(n)} : \mathbf{j} \text{ is pivotal}\big\} \qquad (n \geq 0)$$

is a branching process. In a special setting, they prove $(J_n)_{n\geq 0}$ subcritical $\Rightarrow$ endogeny. For a more restrictive class, endogeny is equivalent to extinction of $(J_n)_{n\geq 0}$.

n-Variate processes

For each $n \geq 1$, a measurable map $g : S^k \to S$ gives rise to *n-variate map* $g^{(n)} : (S^n)^k \to S^n$ defined as

$$g^{(n)}(x_1, \ldots, x_k) = g^{(n)}(x^1, \ldots, x^n) := \big(g(x^1), \ldots, g(x^n)\big),$$

with $x = (x_i^m)_{i=1,\ldots,k}^{m=1,\ldots,n}$, $x_i = (x_i^1, \ldots, x_i^n)$, $x^m = (x_1^m, \ldots, x_k^m)$.

We define an *n-variate map*

$$\mathbf{T}^{(n)}(\mu^{(n)}) := |\mathbf{r}|^{-1} \int_\Omega \mathbf{r}(\mathrm{d}\omega) \mathbf{T}_{\gamma^{(n)}[\omega]}(\mu^{(n)}),$$

which acts on probability measures $\mu^{(n)}$ on S^n.
The *n-variate mean-field equation*

$$\tfrac{\partial}{\partial t}\mu_t^{(n)} = \int_\Omega \mathbf{r}(\mathrm{d}\omega)\big\{\mathbf{T}_{\gamma^{(n)}[\omega]}(\mu_t^{(n)}) - \mu_t^{(n)}\big\} \qquad (t \geq 0).$$

describes the mean-field limit of n coupled processes that are constructed using the same stochastic flow $(\mathbf{X}_{s,u})_{s \leq u}$.

n-Variate processes

$\mathcal{P}(S)$	space of probability measures on S.
$\mathcal{P}_{\rm sym}(S^n)$	space of probability measures on S^n that are symmetric under a permutation of the coordinates.
$S^n_{\rm diag}$	$\{x \in S^n : x_1 = \cdots = x_n\}$
$\mathcal{P}(S^n)_\mu$	space of probability measures on S^n whose one-dimensional marginals are all equal to μ.

- If $(\mu_t^{(n)})_{t\geq 0}$ solves the n-variate equation, then its m-dimensional marginals solve the m-variate equation.
- $\mu_0^{(n)} \in \mathcal{P}_{\rm sym}(S^n)$ implies $\mu_t^{(n)} \in \mathcal{P}_{\rm sym}(S^n)$ $(t \geq 0)$.
- $\mu_0^{(n)} \in \mathcal{P}(S^n_{\rm diag})$ implies $\mu_t^{(n)} \in \mathcal{P}(S^n_{\rm diag})$ $(t \geq 0)$.
- If $\mathbf{T}(\nu) = \nu$, then $\mu_0^{(n)} \in \mathcal{P}(S^n)_\nu$ implies $\mu_t^{(n)} \in \mathcal{P}(S^n)_\nu$.

n-Variate processes

If $\nu = \mathbb{P}[X \in \cdot\,]$ solves the RDE $\mathbf{T}(\nu) = \nu$, then

$$\overline{\nu}^{(n)} := \mathbb{P}\big[(\underbrace{X, \ldots, X}_{n \text{ times}}) \in \cdot\,\big]$$

solves the *n-variate RDE* $\mathbf{T}^{(n)}(\nu^{(n)}) = \nu^{(n)}$.

Questions:

- Is $\overline{\nu}^{(n)}$ a stable fixed point of the n-variate equation?
- Is $\overline{\nu}^{(n)}$ the only solution in $\mathcal{P}_{\mathrm{sym}}(S^n)_\nu$ of the n-variate RDE?

n-Variate processes

Recall that an RTP $(\boldsymbol{\omega}_{\mathbf{i}}, \mathbf{X}_{\mathbf{i}})_{\mathbf{i}\in\mathbb{T}}$ corresponding to a solution ν of the RDE is endogenous if

$$\mathbf{X}_{\varnothing} \text{ is measurable w.r.t. the } \sigma\text{-field generated by } (\boldsymbol{\omega}_{\mathbf{i}})_{\mathbf{i}\in\mathbb{T}}.$$

Theorem [AB '05 & MSS '18] The following statements are equivalent:

(i) The RTP corresponding to ν is endogenous.

(ii) $\mathbf{T}_t^{(n)}(\mu) \underset{t\to\infty}{\Longrightarrow} \overline{\nu}^{(n)}$ for all $\mu \in \mathcal{P}(S^n)_\nu$ and $n \geq 1$.

(iii) $\overline{\nu}^{(2)}$ is the only solution in $\mathcal{P}_{\mathrm{sym}}(S^2)_\nu$ of the bivariate RDE.

In our example, the RTPs for $\nu_{\mathrm{low}}, \nu_{\mathrm{upp}}$ are endogenous, but the RTP corresponding to ν_{mid} is not.

n-Variate processes

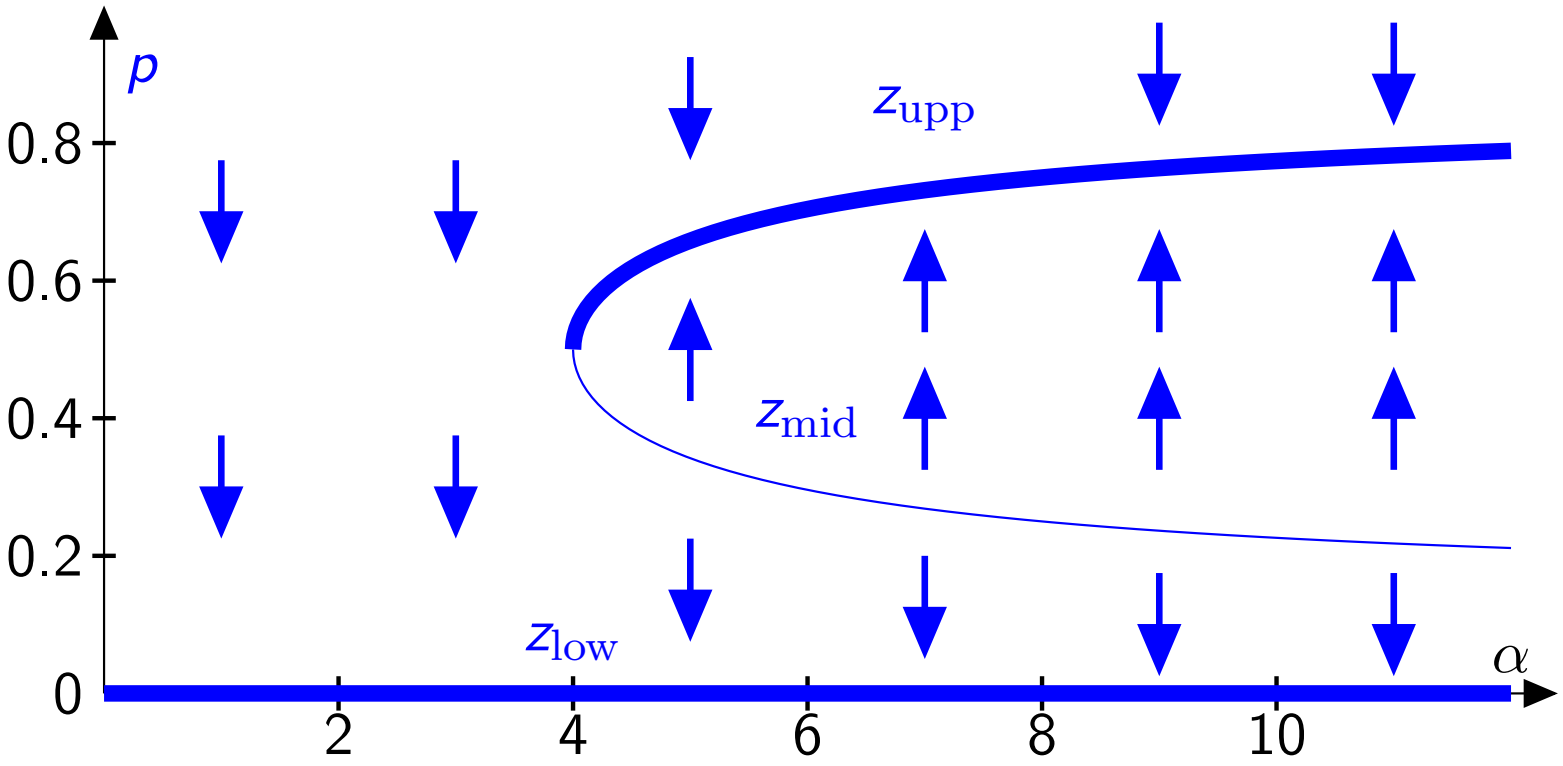

Fixed points of $\frac{\partial}{\partial t} p_t = F_\alpha(p_t)$ for different values of α.

n-Variate processes

Cooperative branching with branching rate $\alpha > 4$

The RDE $\mathsf{T}(\nu) = \nu$ has three solutions $\nu_{\rm low}, \nu_{\rm mid}$, and $\nu_{\rm upp}$, where $\nu_{\ldots}$ is the probability measure on $\{0,1\}$ with mean $\nu_{\ldots}(\{1\}) = z_{\ldots}$ $(\ldots = {\rm low}, {\rm mid}, {\rm upp})$, which

give rise to solutions $\overline{\nu}^{(2)}_{\rm low}, \overline{\nu}^{(2)}_{\rm mid}$, and $\overline{\nu}^{(2)}_{\rm upp}$ of the *bivariate RDE.*

Proposition [Mach, Sturm, S. '18] Apart from $\overline{\nu}^{(2)}_{\rm low}, \overline{\nu}^{(2)}_{\rm mid}, \overline{\nu}^{(2)}_{\rm upp}$, the *bivariate RDE* has one more solution $\underline{\nu}^{(2)}_{\rm mid}$ in $\mathcal{P}_{\rm sym}(S^2)$. The domains of attraction are:

$$
\begin{array}{ll}
\overline{\nu}^{(2)}_{\rm low}: & \{\mu_0^{(2)} : \mu_0^{(1)}(\{1\}) < z_{\rm mid}\}, \\
\underline{\nu}^{(2)}_{\rm mid}: & \{\mu_0^{(2)} : \mu_0^{(1)}(\{1\}) = z_{\rm mid},\ \mu_0^{(2)} \neq \overline{\nu}^{(2)}_{\rm mid}\}, \\
\overline{\nu}^{(2)}_{\rm mid}: & \{\overline{\nu}^{(2)}_{\rm mid}\}, \\
\overline{\nu}^{(2)}_{\rm upp}: & \{\mu_0^{(2)} : \mu_0^{(1)}(\{1\}) > z_{\rm mid}\}.
\end{array}
$$

The higher-level equation

The n-variate map $\mathbf{T}^{(n)}$ is defined even for $n = \infty$,
and $\mathbf{T}^{(\infty)}$ maps $\mathcal{P}_{\mathrm{sym}}(S^{\mathbb{N}_+})$ into itself.

By De Finetti's theorem, $(X_i)_{i\in\mathbb{N}_+}$ have a law in $\mathcal{P}_{\mathrm{sym}}(S^{\mathbb{N}_+})$ if and only if there exists a random probability measure ξ on S such that conditional on ξ, the $(X_i)_{i\in\mathbb{N}_+}$ are i.i.d. with law ξ.

Let $\rho := \mathbb{P}[\xi \in \cdot\,]$ the law of ξ. Then $\rho \in \mathcal{P}(\mathcal{P}(S))$.
In view of this, $\mathcal{P}_{\mathrm{sym}}(S^{\mathbb{N}_+}) \cong \mathcal{P}(\mathcal{P}(S))$.

The map $\mathbf{T}^{(\infty)} : \mathcal{P}_{\mathrm{sym}}(S^{\mathbb{N}_+}) \to \mathcal{P}_{\mathrm{sym}}(S^{\mathbb{N}_+})$
corresponds to a *higher-level map* $\check{\mathbf{T}} : \mathcal{P}(\mathcal{P}(S)) \to \mathcal{P}(\mathcal{P}(S))$.

The higher-level equation

For any measurable map $g : S^k \to S$, define $\check{g} : \mathcal{P}(S)^k \to \mathcal{P}(S)$ by

$$\check{g} := \text{ the law of } g(X_1, \dots, X_k),$$
$$\text{where } (X_1, \dots, X_k) \text{ are independent with laws } \mu_1, \dots, \mu_k.$$

Then

$$\check{\mathsf{T}}(\rho) := \text{ the law of } \check{\gamma}[\boldsymbol{\omega}](\xi_1, \dots, \xi_{\kappa(\boldsymbol{\omega})}),$$

with $\boldsymbol{\omega}$ as before and $\xi_1, \xi_2, \dots$ i.i.d. with law ρ.

Define *n-th moment measures*

$$\rho^{(n)} := \mathbb{E}\big[\underbrace{\xi \otimes \cdots \otimes \xi}_{n \text{ times}}\big] \quad \text{where } \xi \text{ has law } \rho.$$

Proposition [MSS '18] If $(\rho_t)_{t \geq 0}$ solves the *higher-level mean-field equation*, then its n-th moment measures $(\rho_t^{(n)})_{t \geq 0}$ solve the n-variate equation.

The higher-level equation

Equip $\mathcal{P}(\mathcal{P}(S))_\nu = \{\rho : \rho^{(1)} = \nu\}$ with the *convex order*

$$\rho_1 \leq_{\rm cv} \rho_2 \quad \text{iff} \quad \int \phi \, {\rm d}\rho_1 \leq \int \phi \, {\rm d}\rho_2 \quad \forall \text{ convex } \phi.$$

[Strassen '65] $\rho_1 \leq_{\rm cv} \rho_2$ iff there exist a r.v. X with law ν and σ-fields $\mathcal{H}_1 \subset \mathcal{H}_2$ s.t. $\rho_i = \mathbb{P}\big[\mathbb{P}[X \in \cdot \,|\mathcal{H}_i] \in \cdot\,\big]$ $(i = 1, 2)$.

Maximal and minimal elements: $\mathcal{H}_1 = \{\Omega, \emptyset\} \;\Rightarrow\; \rho_1 = \delta_\nu$.
$\mathcal{H}_2 = \sigma(X) \;\Rightarrow\; \rho_2 = \overline{\nu} := \mathbb{P}[\delta_X \in \cdot\,]$ with $\mathbb{P}[X \in \cdot\,] = \nu$.

$$\delta_\nu \leq_{\rm cv} \rho \leq_{\rm cv} \overline{\nu} \qquad \forall \rho \in \mathcal{P}(\mathcal{P}(S))_\nu.$$

Proposition [MSS '18] $\check{\mathsf{T}}$ is monotone w.r.t. the convex order. There exists a solution $\underline{\nu}$ to the higher-level RDE s.t.

$$\check{\mathsf{T}}^n(\delta_\nu) \underset{n\to\infty}{\Longrightarrow} \underline{\nu} \quad \text{and} \quad \check{\mathsf{T}}_t(\delta_\nu) \underset{t\to\infty}{\Longrightarrow} \underline{\nu}$$

and any solution $\rho \in \mathcal{P}(\mathcal{P}(S))_\nu$ to the higher-level RDE satisfies

$$\underline{\nu} \leq_{\rm cv} \rho \leq_{\rm cv} \overline{\nu} \qquad \forall \rho \in \mathcal{P}(\mathcal{P}(S))_\nu.$$

The higher-level equation

Proposition [MSS '18]
Let $(\boldsymbol{\omega}_{\mathbf{i}}, \mathbf{X}_{\mathbf{i}})_{\mathbf{i}\in\mathbb{T}}$ be the RTP corresponding to γ and ν. Set

$$\xi_{\mathbf{i}} := \mathbb{P}\big[X_{\mathbf{i}} \in \ \cdot \,|\, (\boldsymbol{\omega}_{\mathbf{ij}})_{\mathbf{j}\in\mathbb{T}}\big].$$

Then $(\boldsymbol{\omega}_{\mathbf{i}}, \xi_{\mathbf{i}})_{\mathbf{i}\in\mathbb{T}}$ is an RTP corresponding to $\check{\gamma}$ and $\underline{\nu}$.
Also, $(\boldsymbol{\omega}_{\mathbf{i}}, \delta_{X_{\mathbf{i}}})_{\mathbf{i}\in\mathbb{T}}$ is an RTP corresponding to $\check{\gamma}$ and $\overline{\nu}$.

Corollary The RTP is endogenous iff $\underline{\nu} = \overline{\nu}$.

The higher-level equation

Theorem [Mach, Sturm, S. '18] One has

$$\underline{\nu}_{\rm low} = \overline{\nu}_{\rm low}, \quad \underline{\nu}_{\rm upp} = \overline{\nu}_{\rm upp}, \quad \text{but} \quad \underline{\nu}_{\rm mid} \neq \overline{\nu}_{\rm mid}.$$

These are all solutions to the higher-level RDE.
Any solution $(\rho_t)_{t\geq 0}$ to the higher-level mean-field equation converges to one of these fixed points.
The domains of attraction are:

$$\begin{aligned}
\overline{\nu}_{\rm low}: &\quad \big\{\rho_0 : \rho_0^{(1)}(\{1\}) < z_{\rm mid}\big\},\\
\underline{\nu}_{\rm mid}: &\quad \big\{\rho_0 : \rho_0^{(1)}(\{1\}) = z_{\rm mid},\ \rho_0 \neq \overline{\nu}_{\rm mid}\big\},\\
\overline{\nu}_{\rm mid}: &\quad \big\{\overline{\nu}_{\rm mid}\big\},\\
\overline{\nu}_{\rm upp}: &\quad \big\{\rho_0 : \rho_0^{(1)}(\{1\}) > z_{\rm mid}\big\}.
\end{aligned}$$

The higher-level equation

The map $\mu \mapsto \mu(\{1\})$ defines a bijection $\mathcal{P}(\{0,1\}) \cong [0,1]$, and hence $\mathcal{P}(\mathcal{P}(\{0,1\})) \cong \mathcal{P}[0,1]$.

Then the higher-level RDE takes the form

$$\eta \stackrel{\mathrm{d}}{=} \chi \cdot \big(\eta_1 + (1-\eta_1)\eta_2\eta_3\big),$$

where η takes values in $[0,1]$, η_1, η_2, η_3 are independent copies of η and χ is an independent Bernoulli r.v. with $\mathbb{P}[\chi = 1] = \alpha/(\alpha+1)$.

This RDE has three "trivial" solutions

$$\overline{\nu}_{\ldots} = (1 - z_{\ldots})\delta_0 + z_{\ldots}\delta_1 \qquad (\ldots = \mathrm{low}, \mathrm{mid}, \mathrm{upp}),$$

and a nontrivial solution

$$\underline{\nu}_{\mathrm{mid}} = \lim_{n\to\infty} \check{\mathsf{T}}^n(\delta_{z_{\mathrm{mid}}}).$$

Numerical results

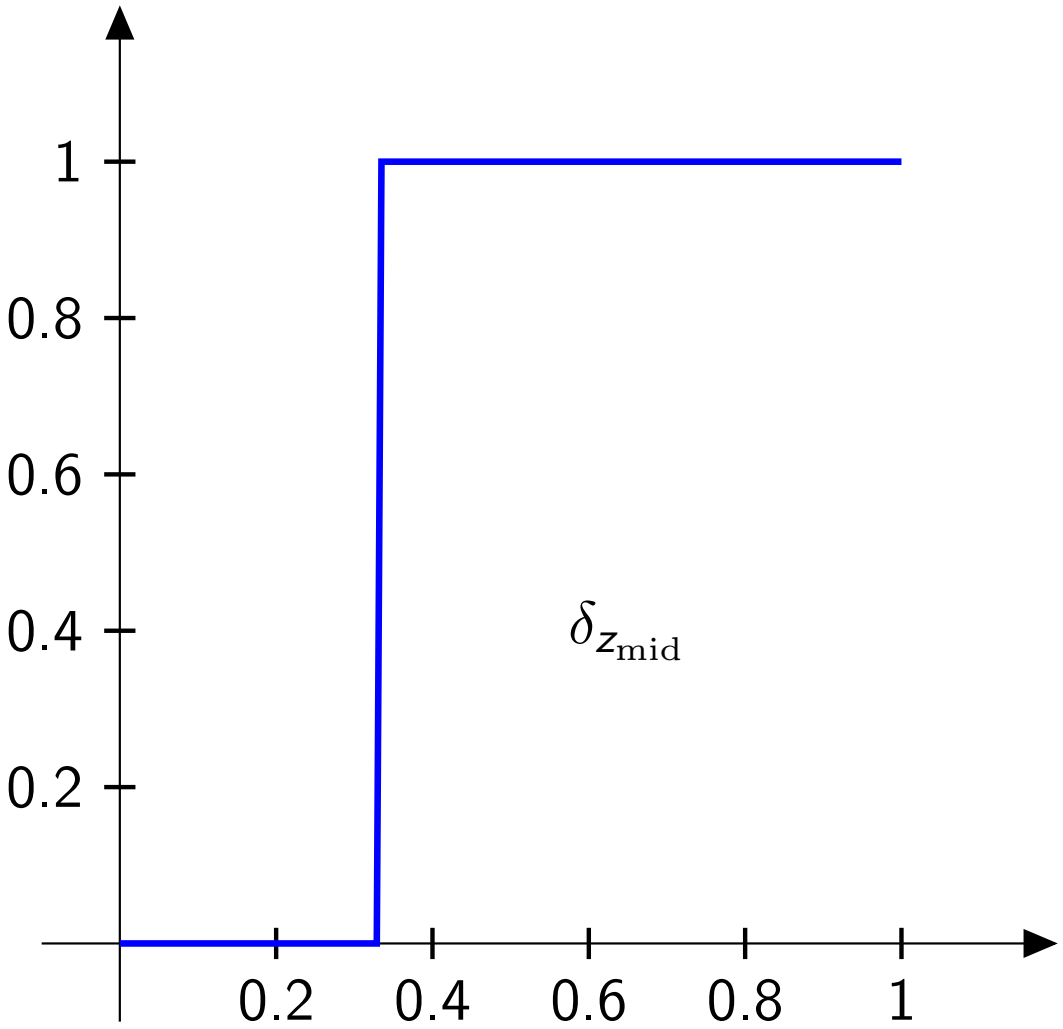

Numerical results

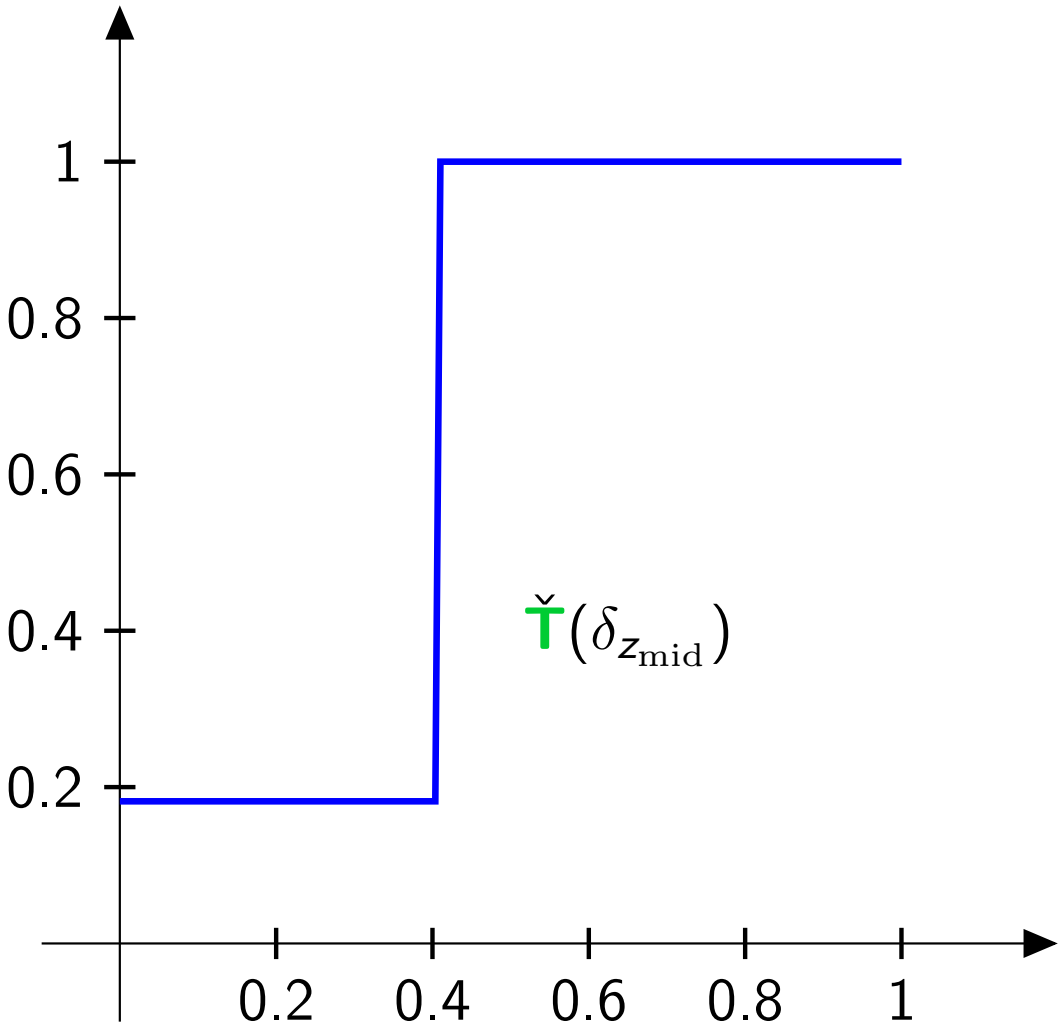

Numerical results

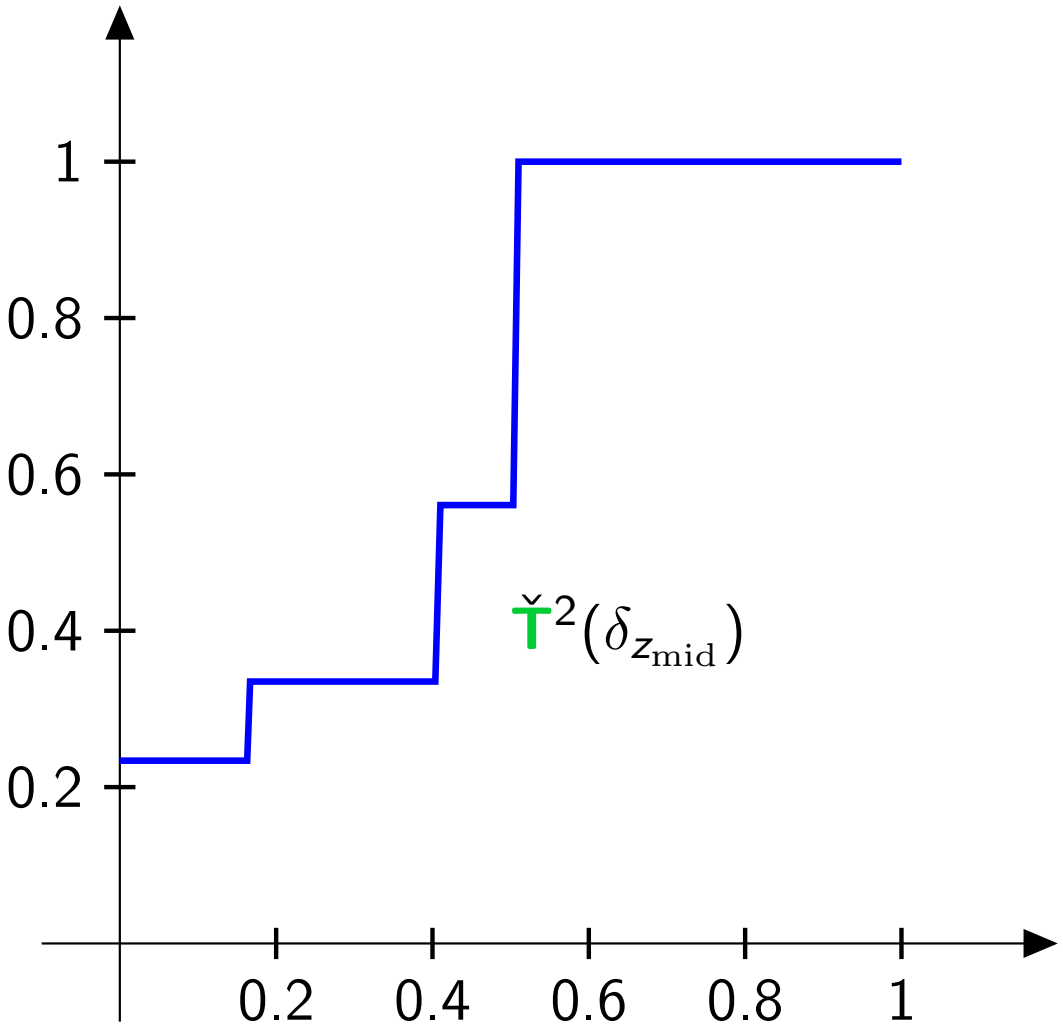

Numerical results

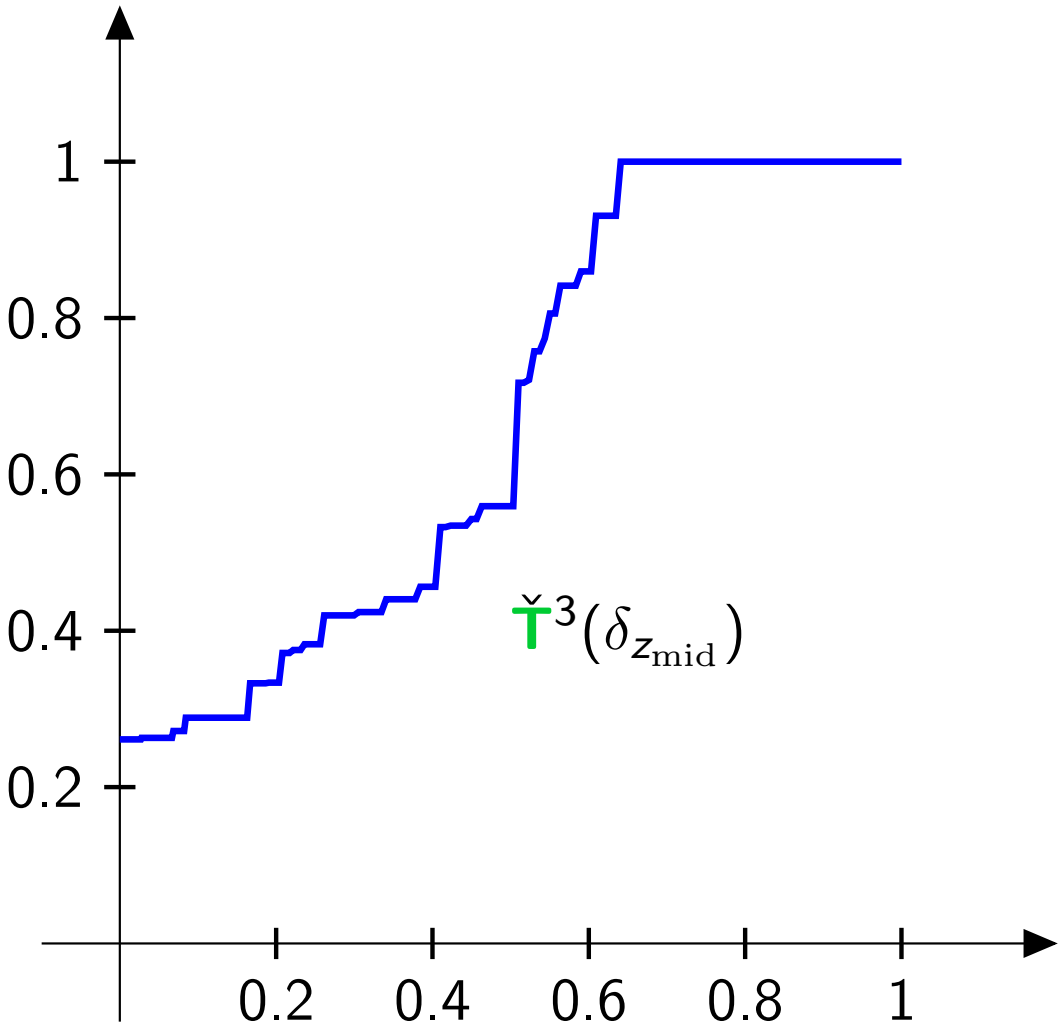

Numerical results

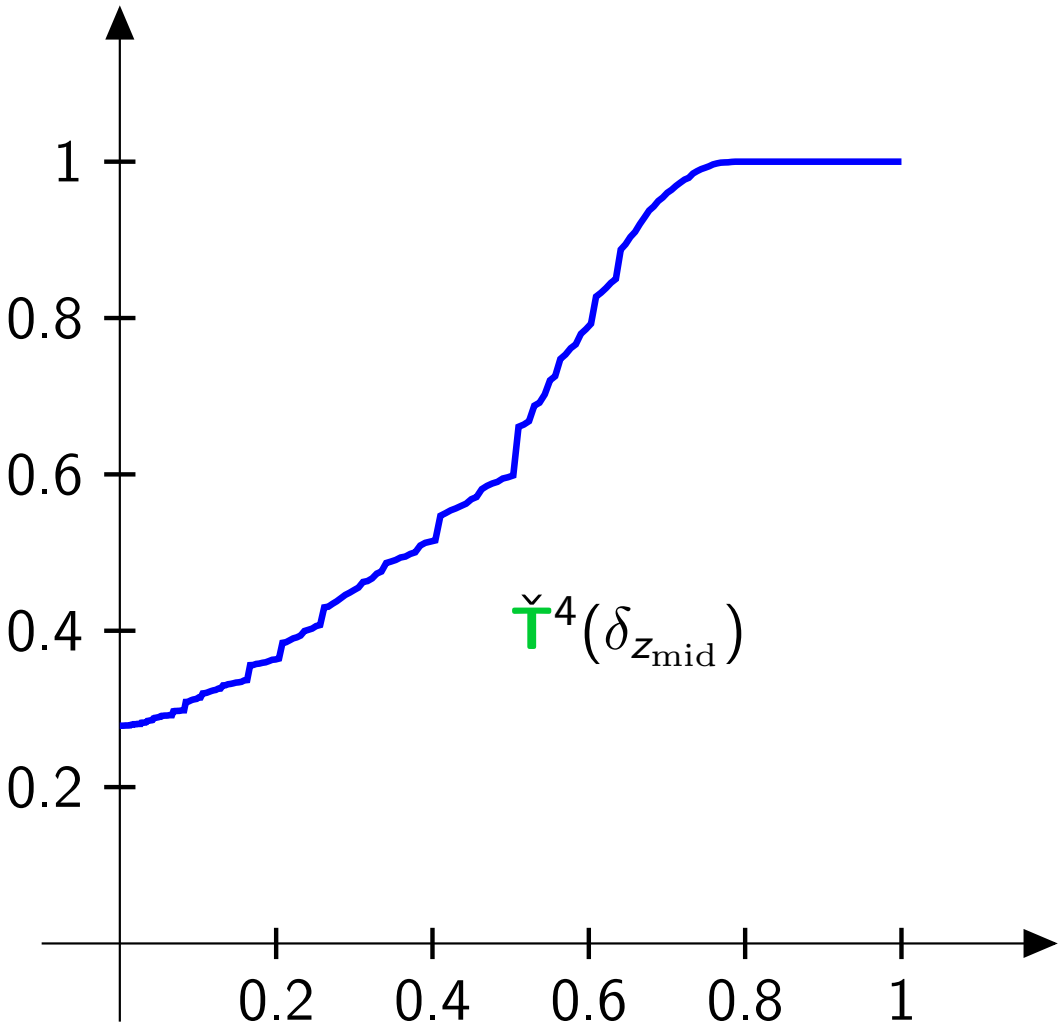

Numerical results

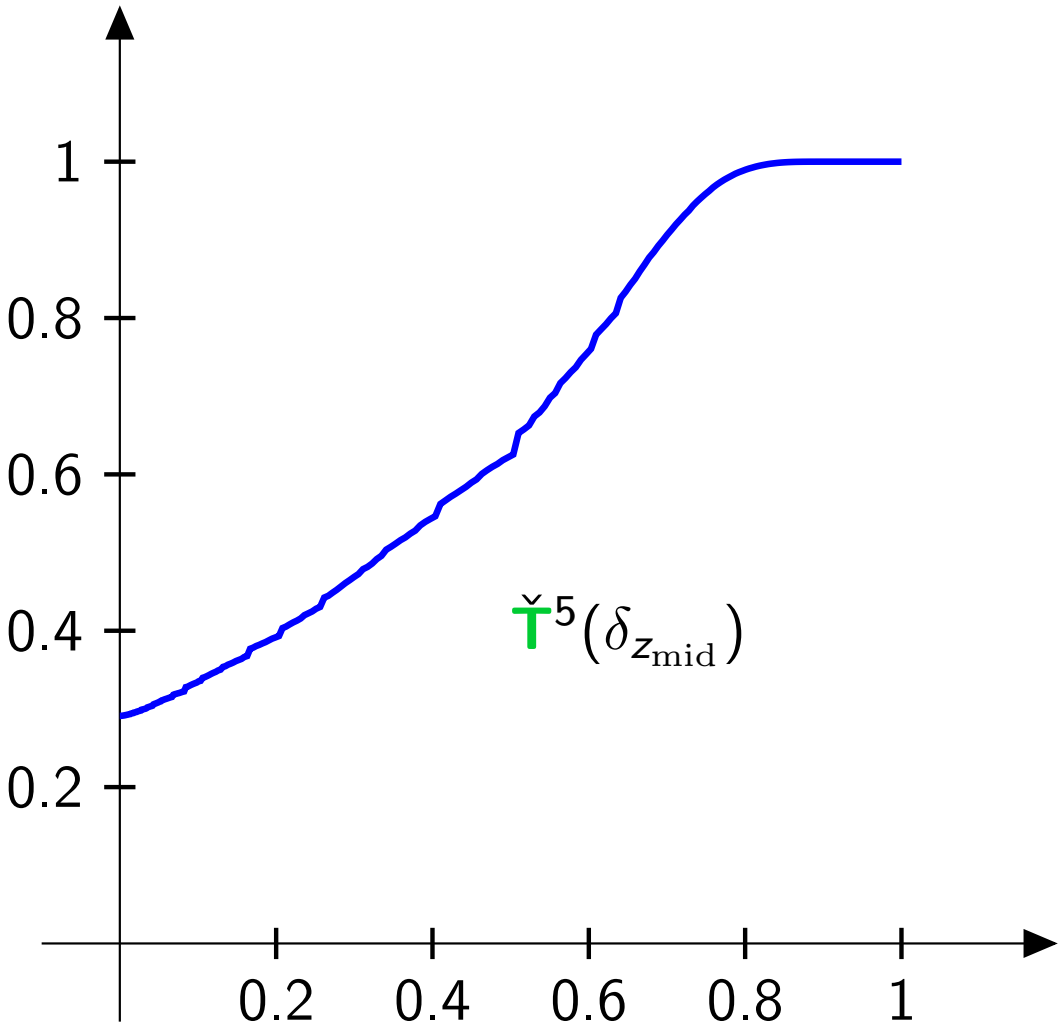

Numerical results

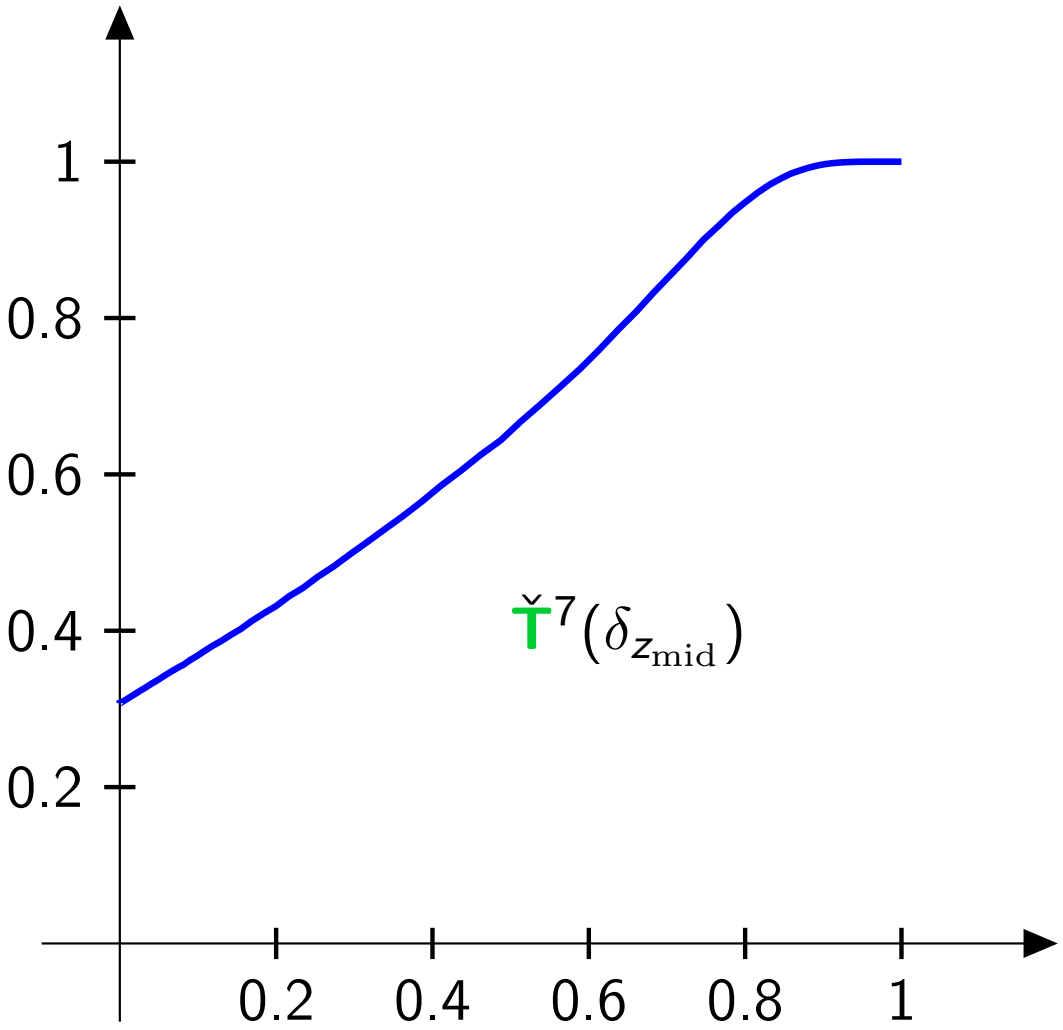

Numerical results

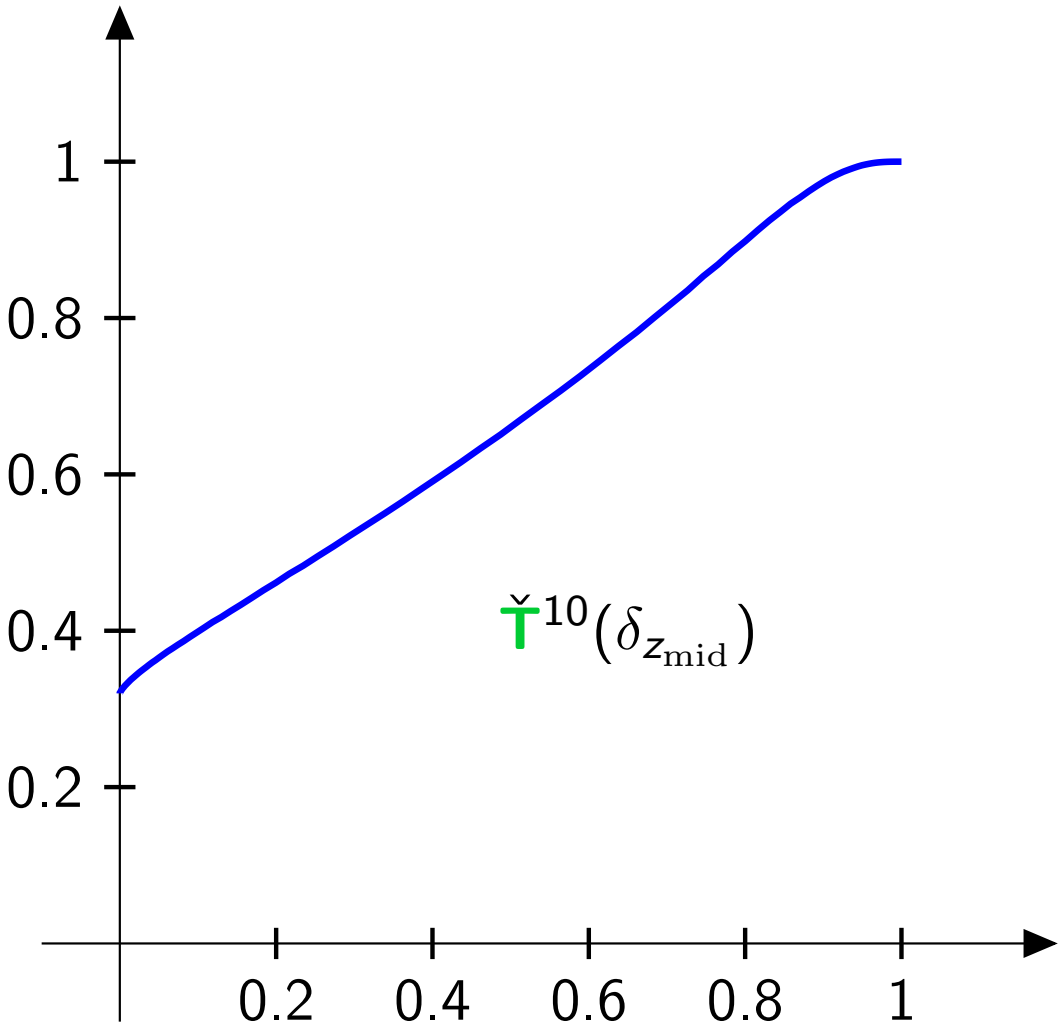

Numerical results

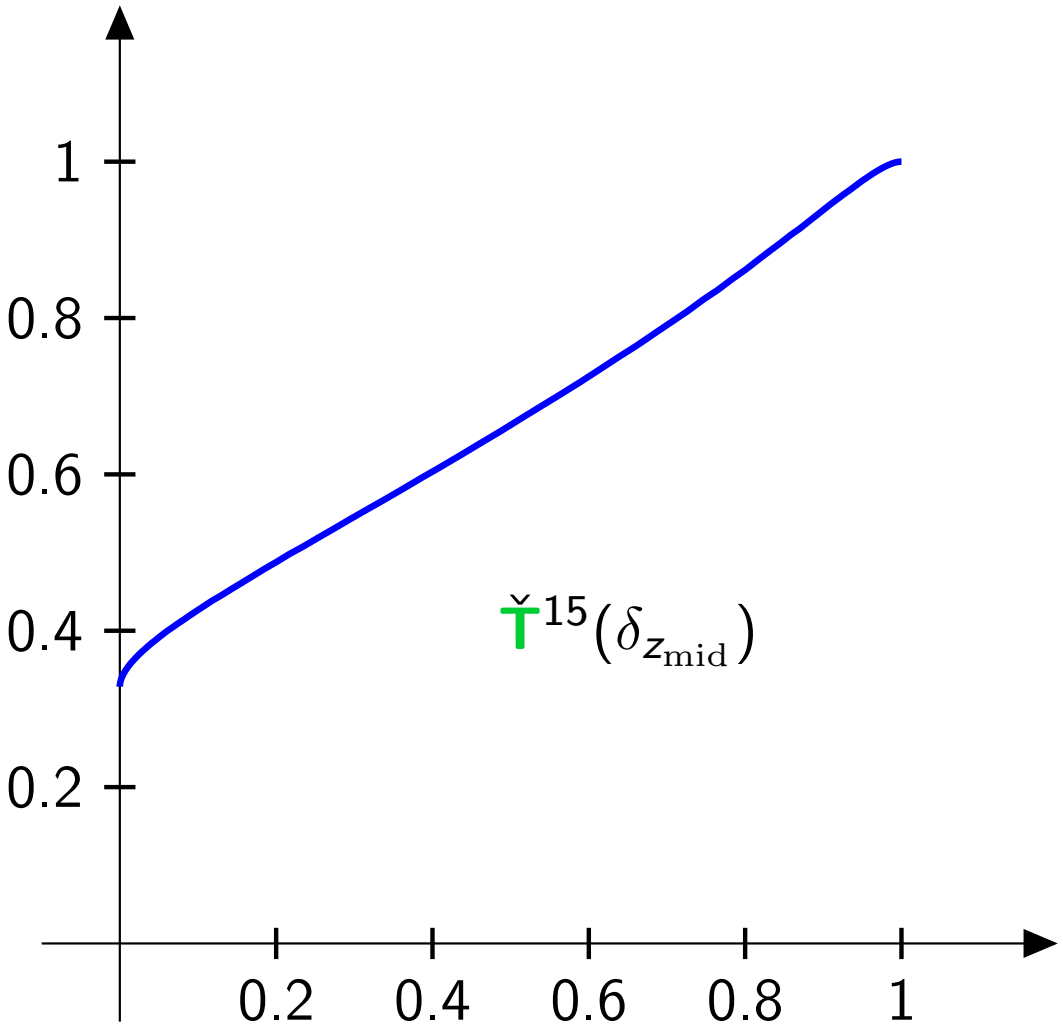

Numerical results

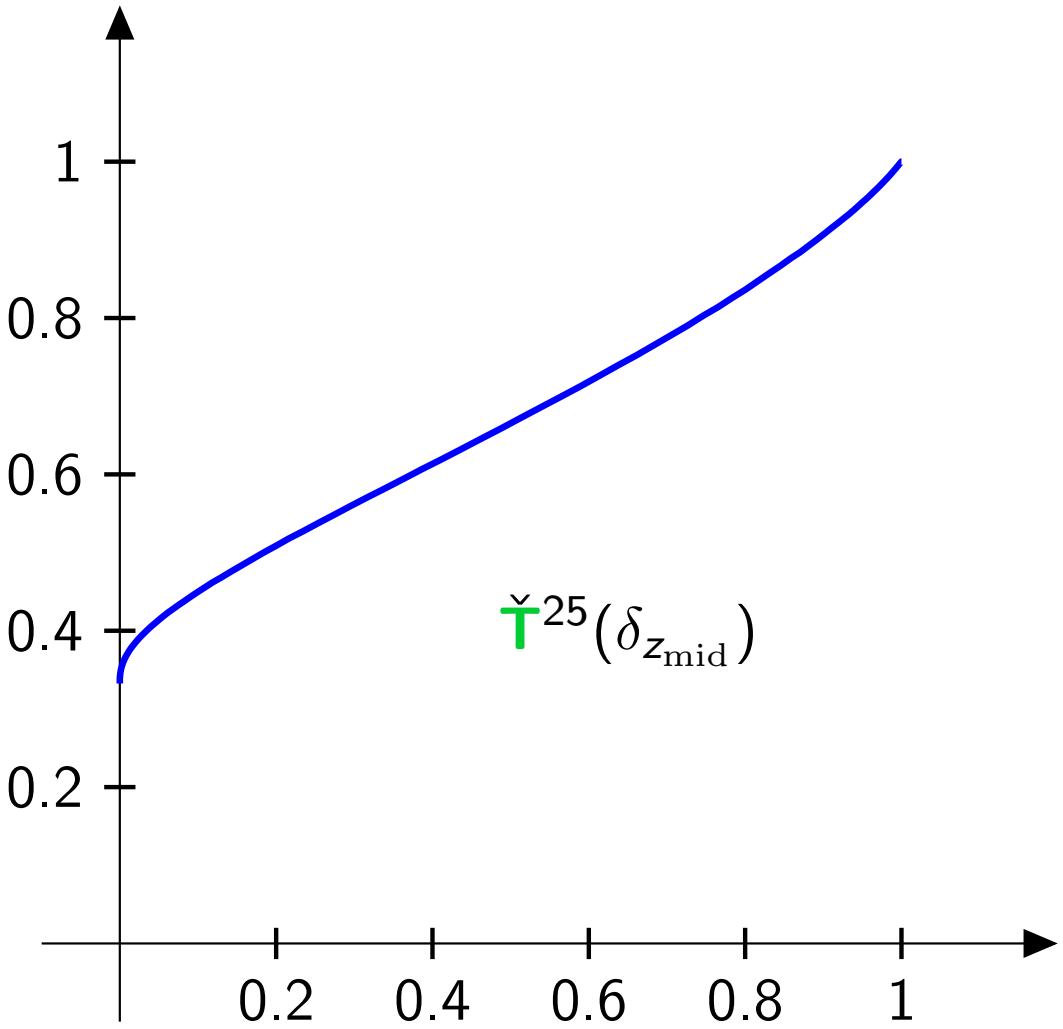

Numerical results

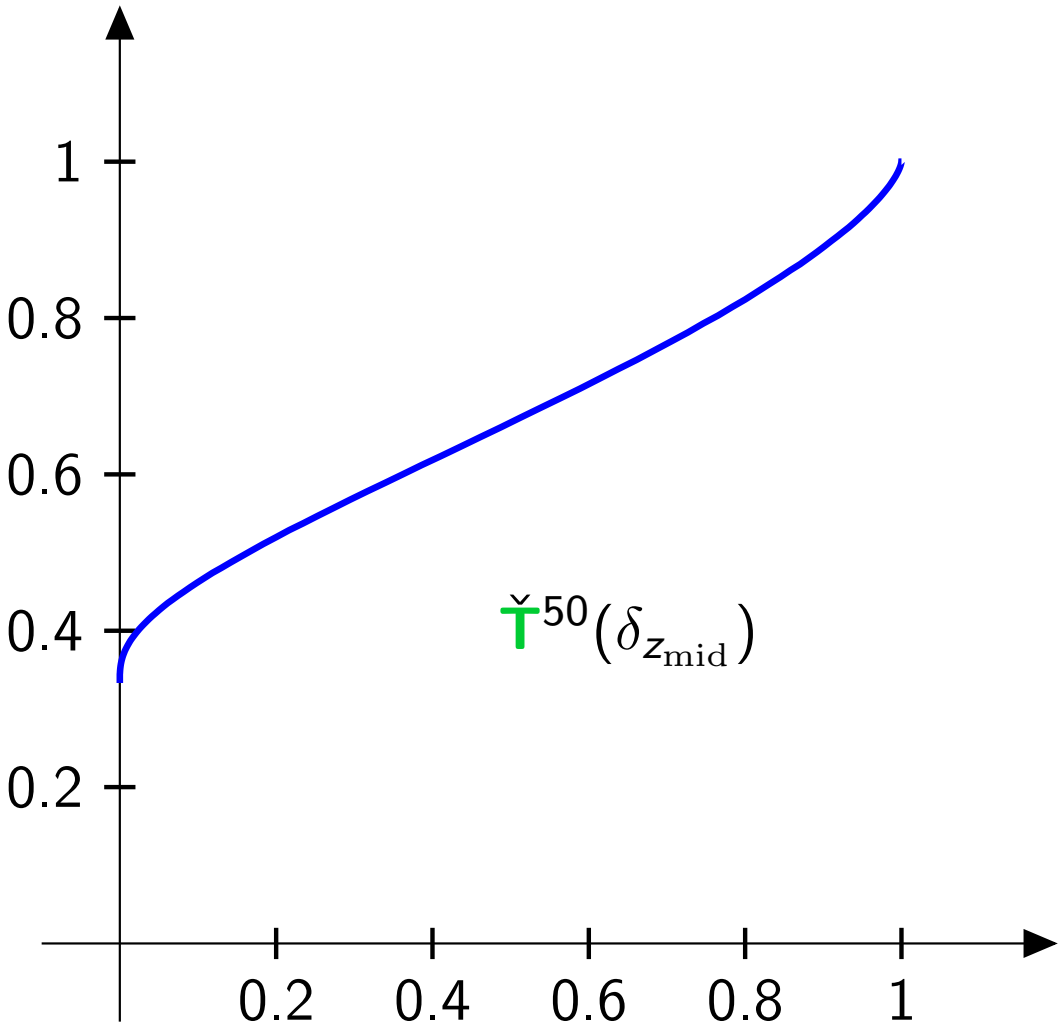

Numerical results

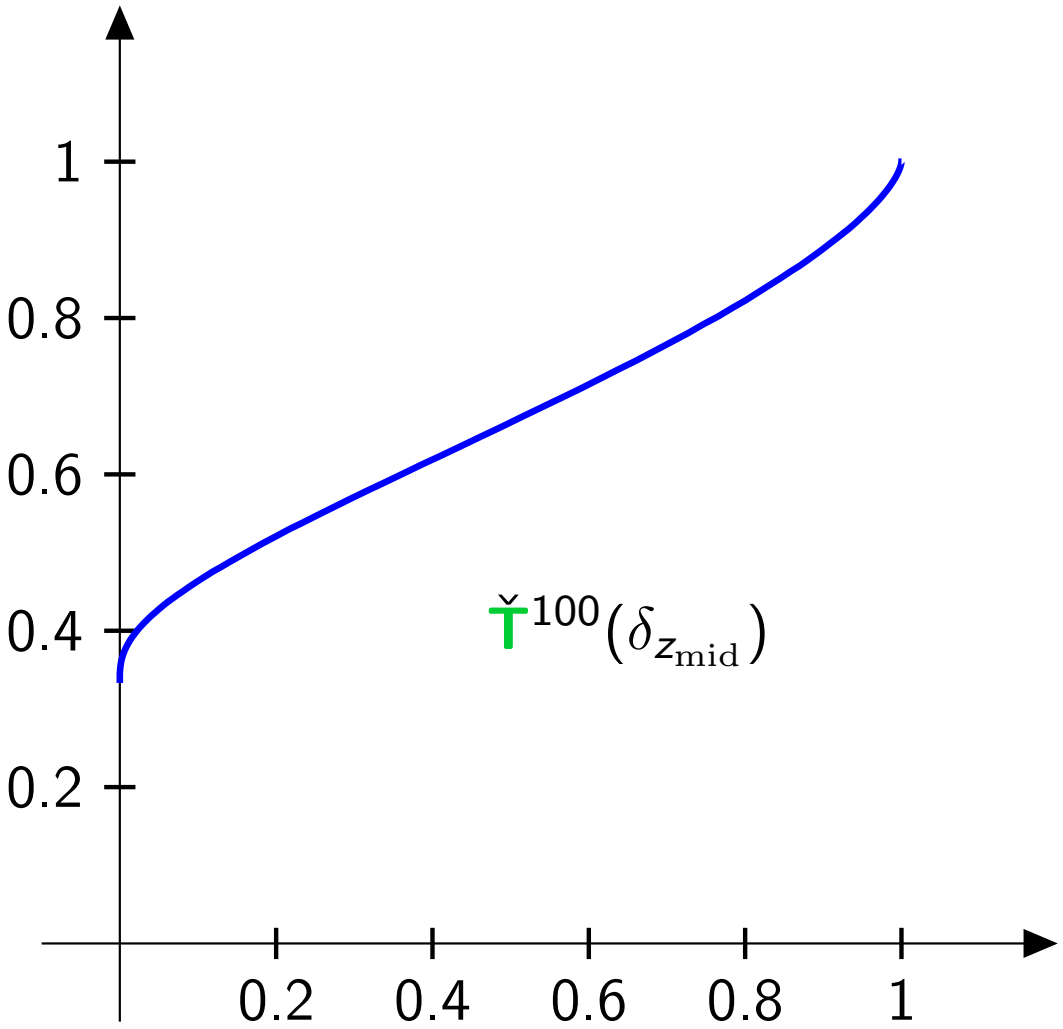

Numerical results

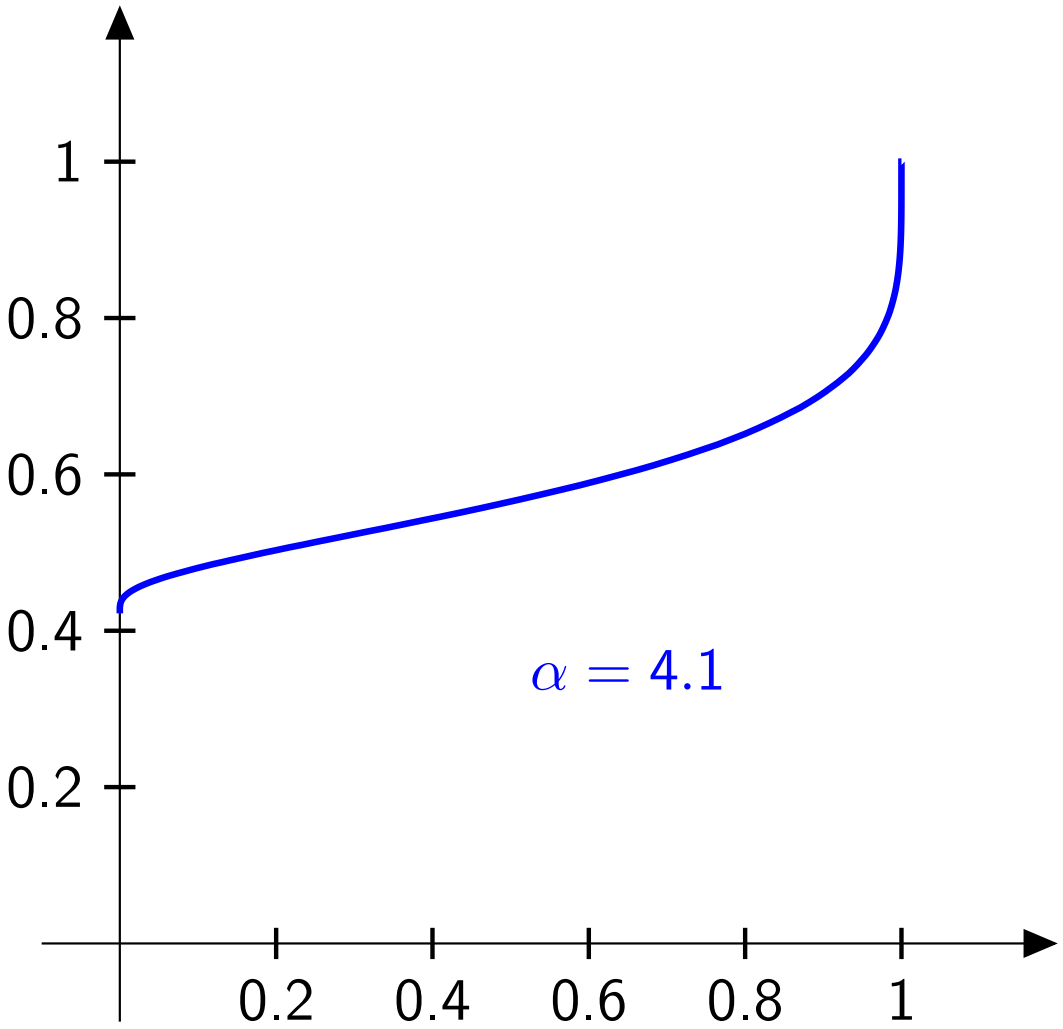

Numerical results

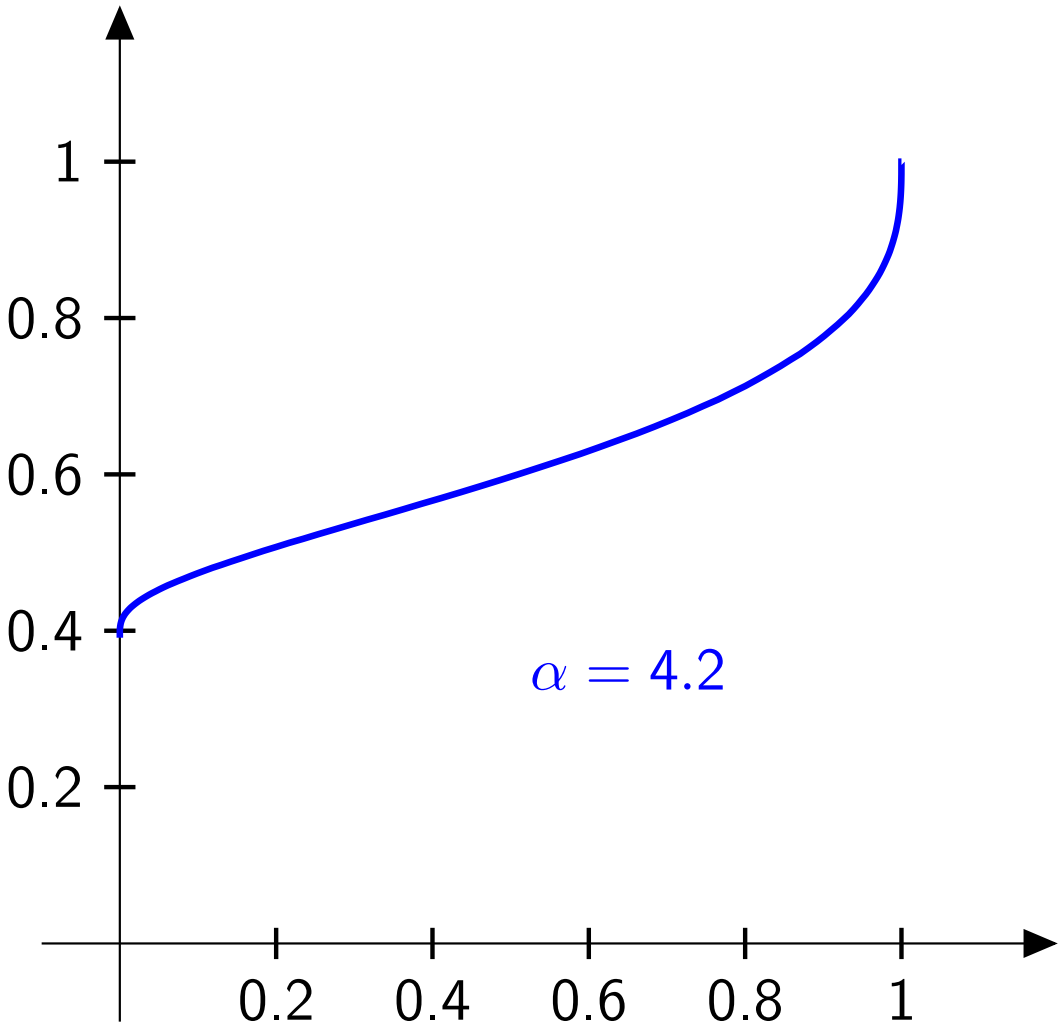

Numerical results

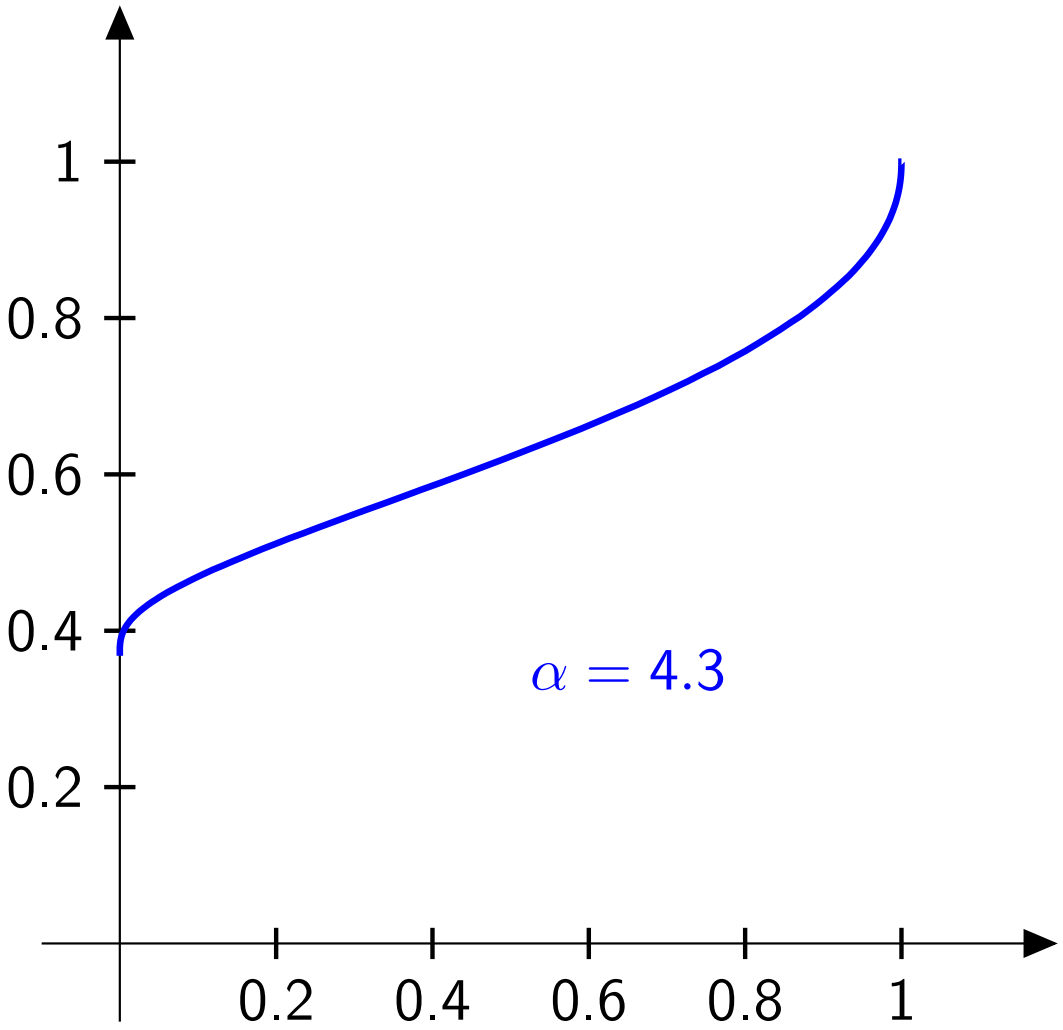

Numerical results

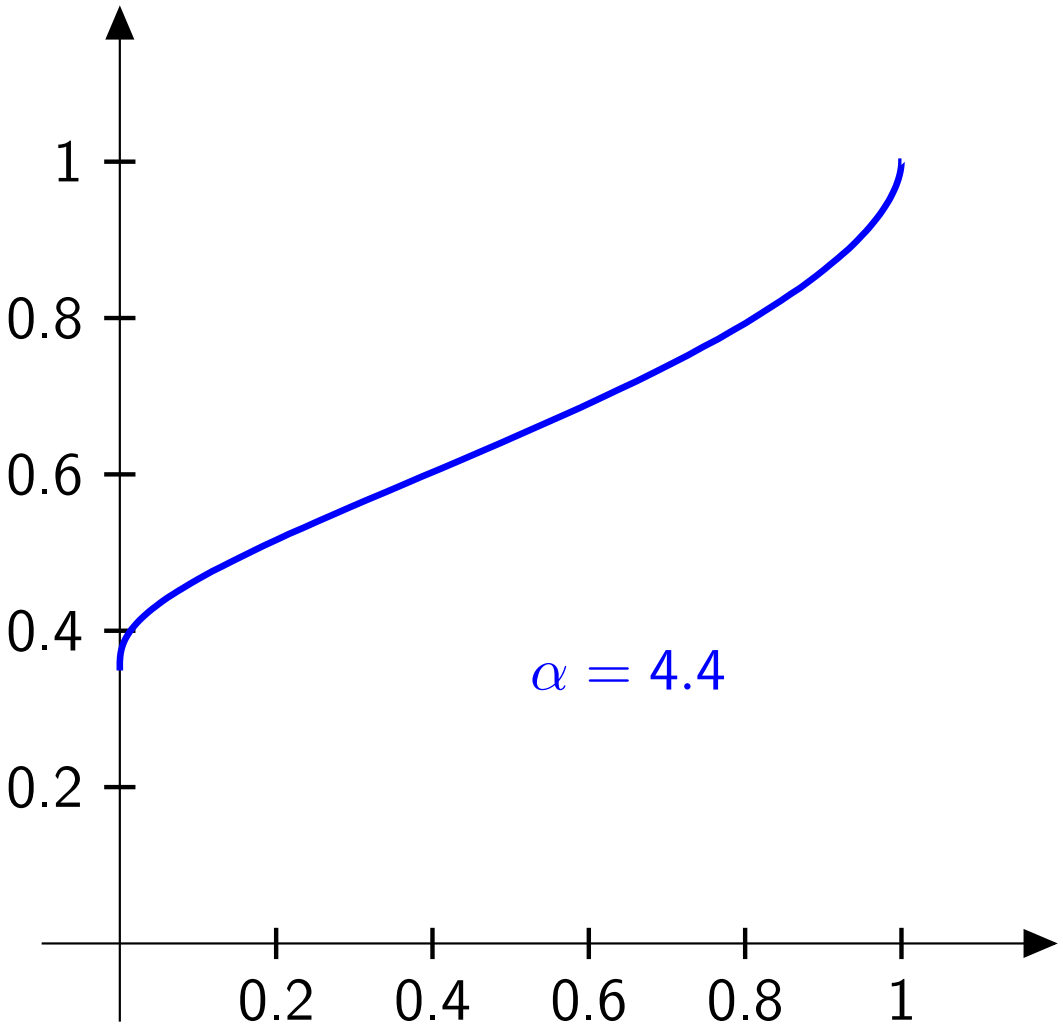

Numerical results

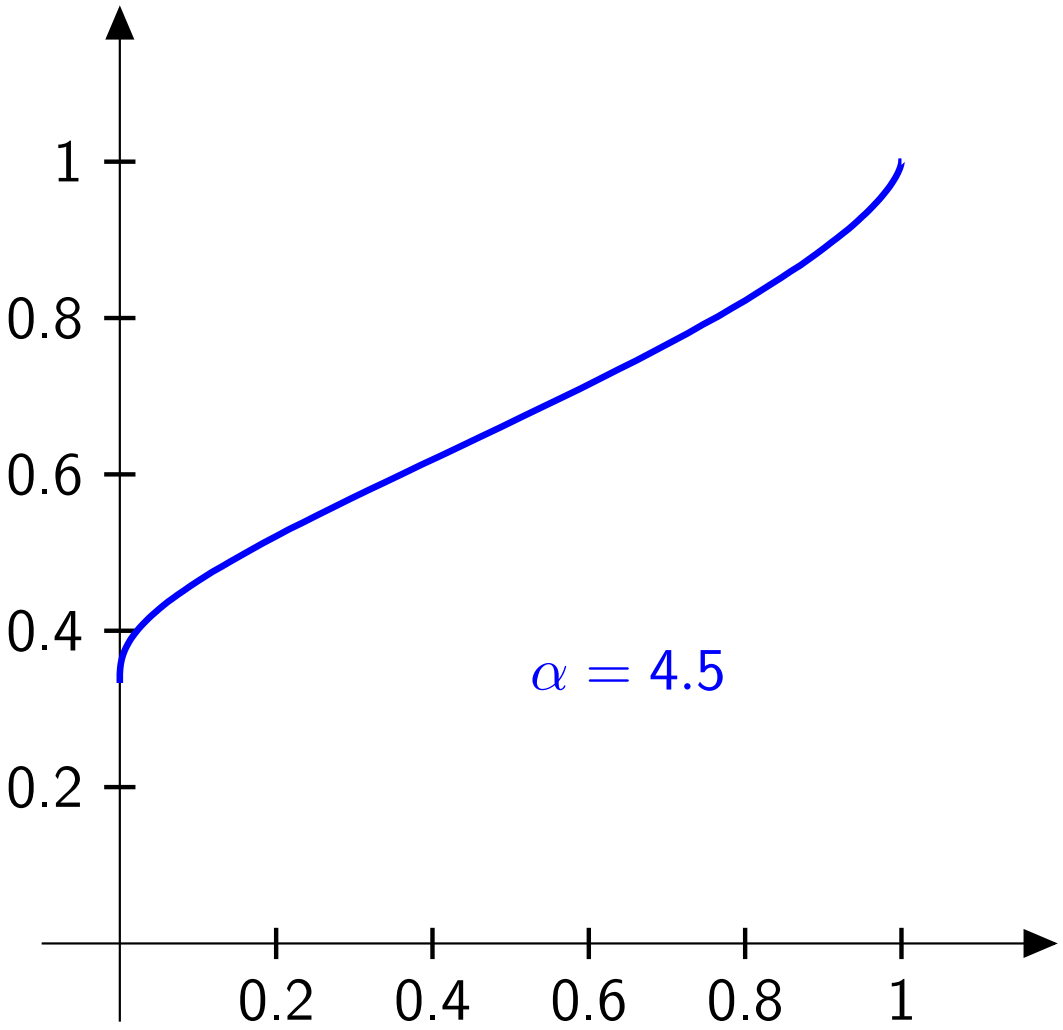

Numerical results

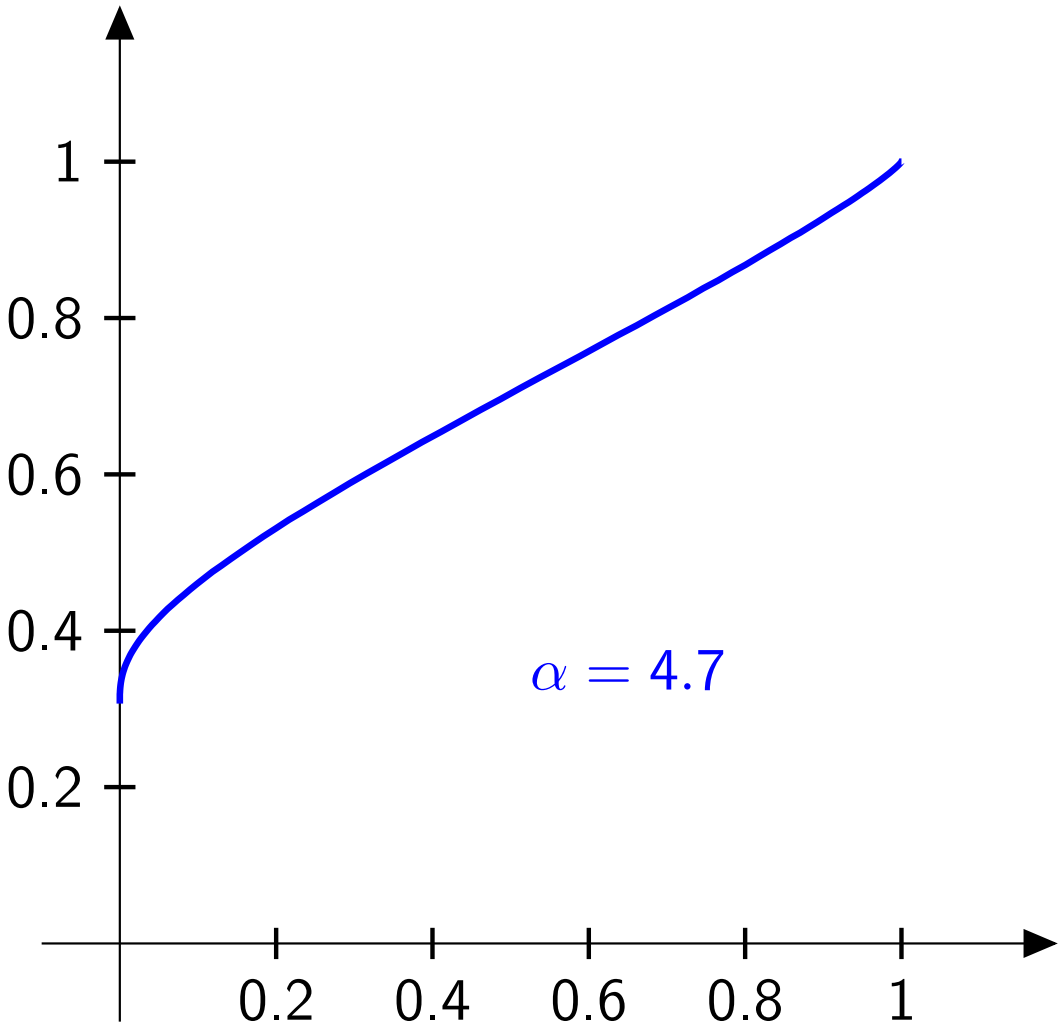

Numerical results

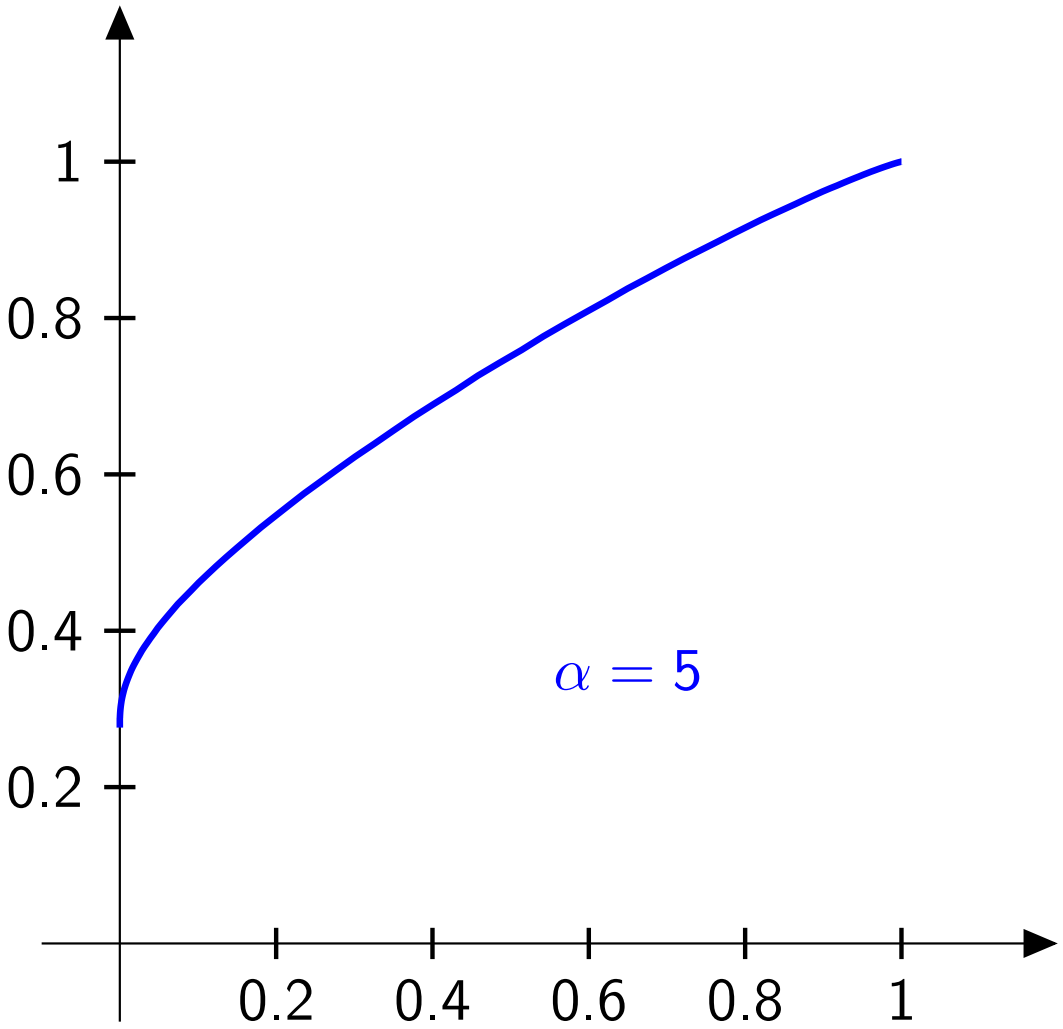

Numerical results

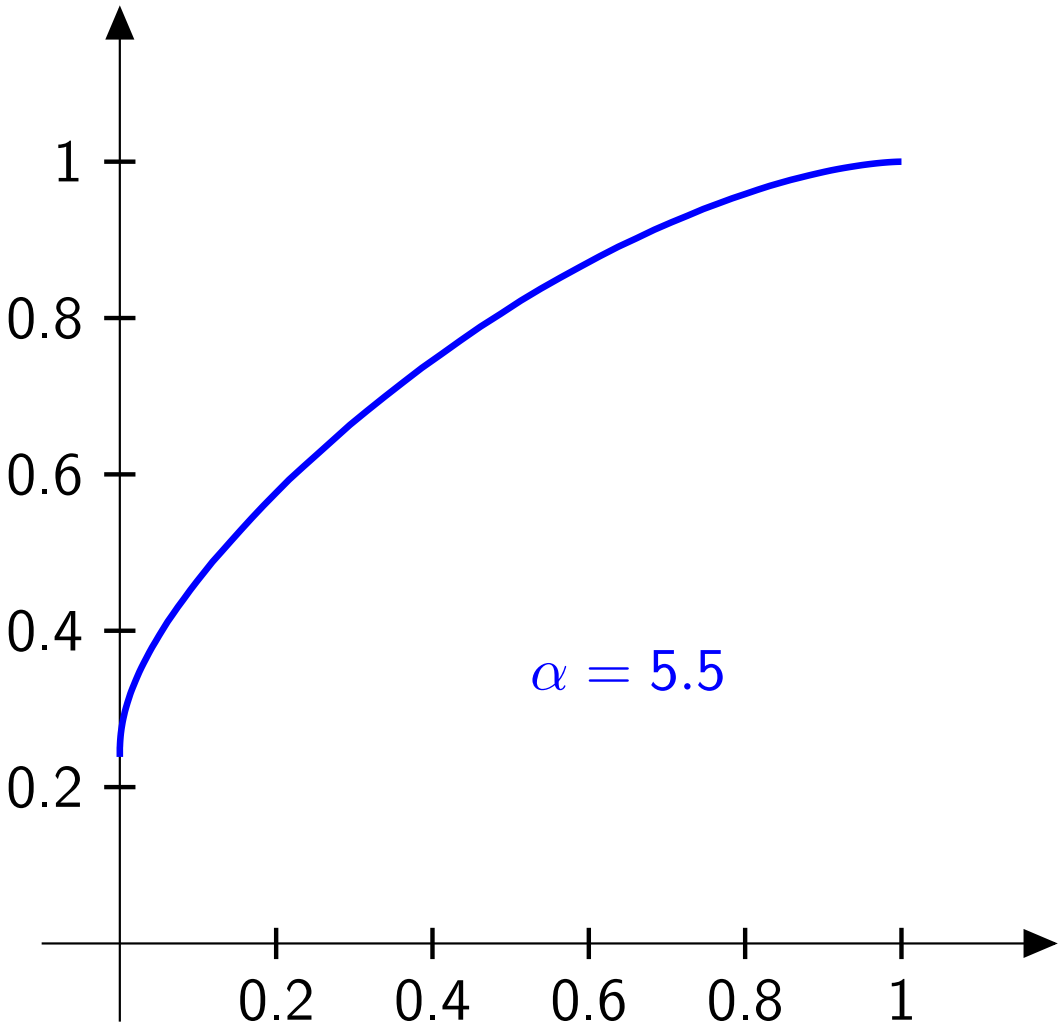

Numerical results

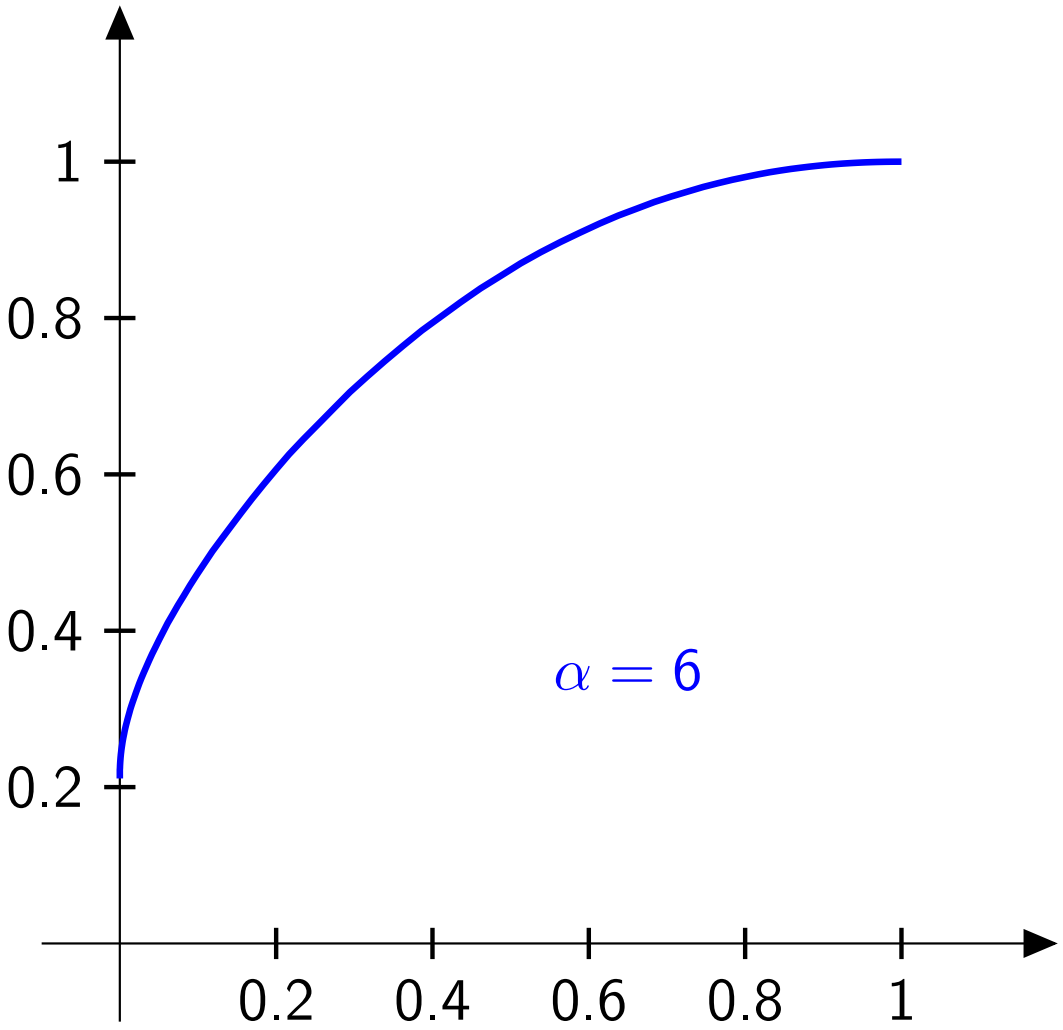

Numerical results

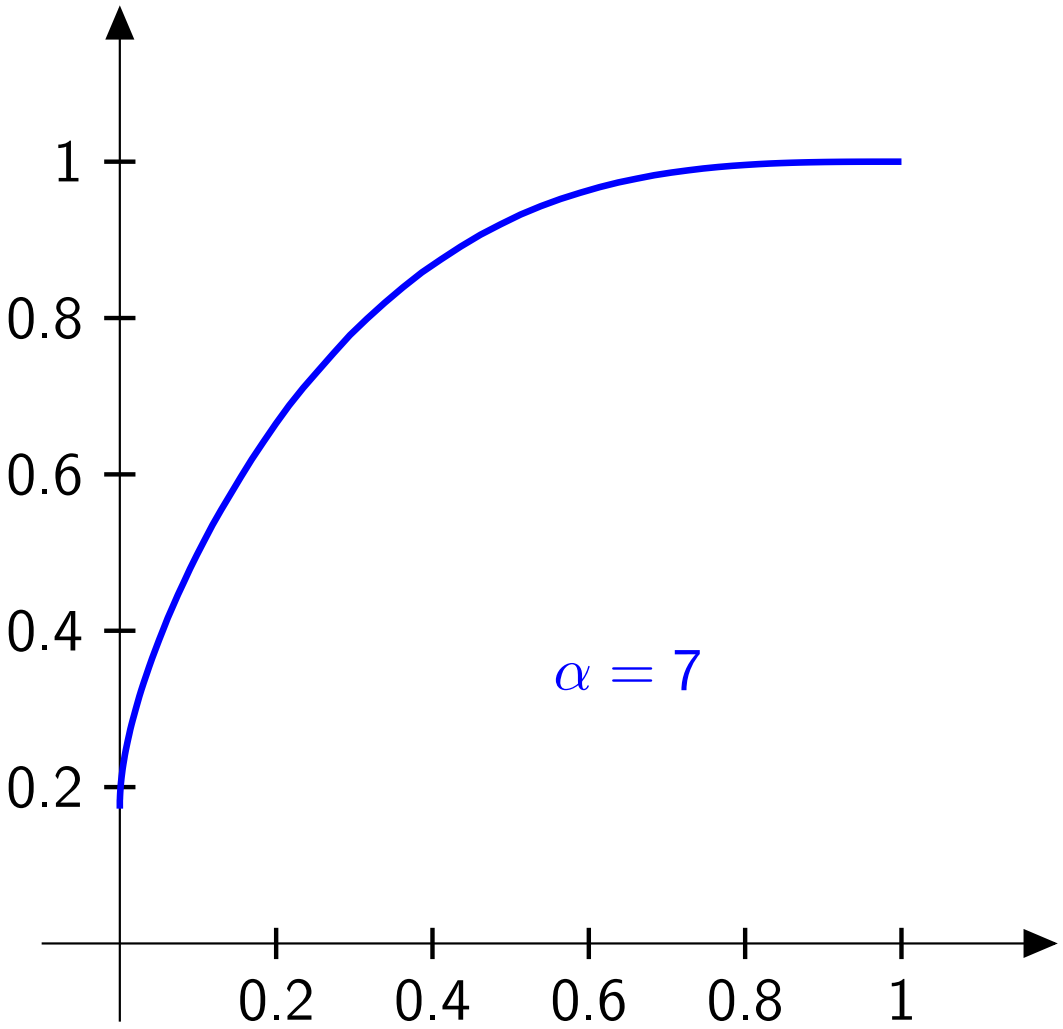

Numerical results

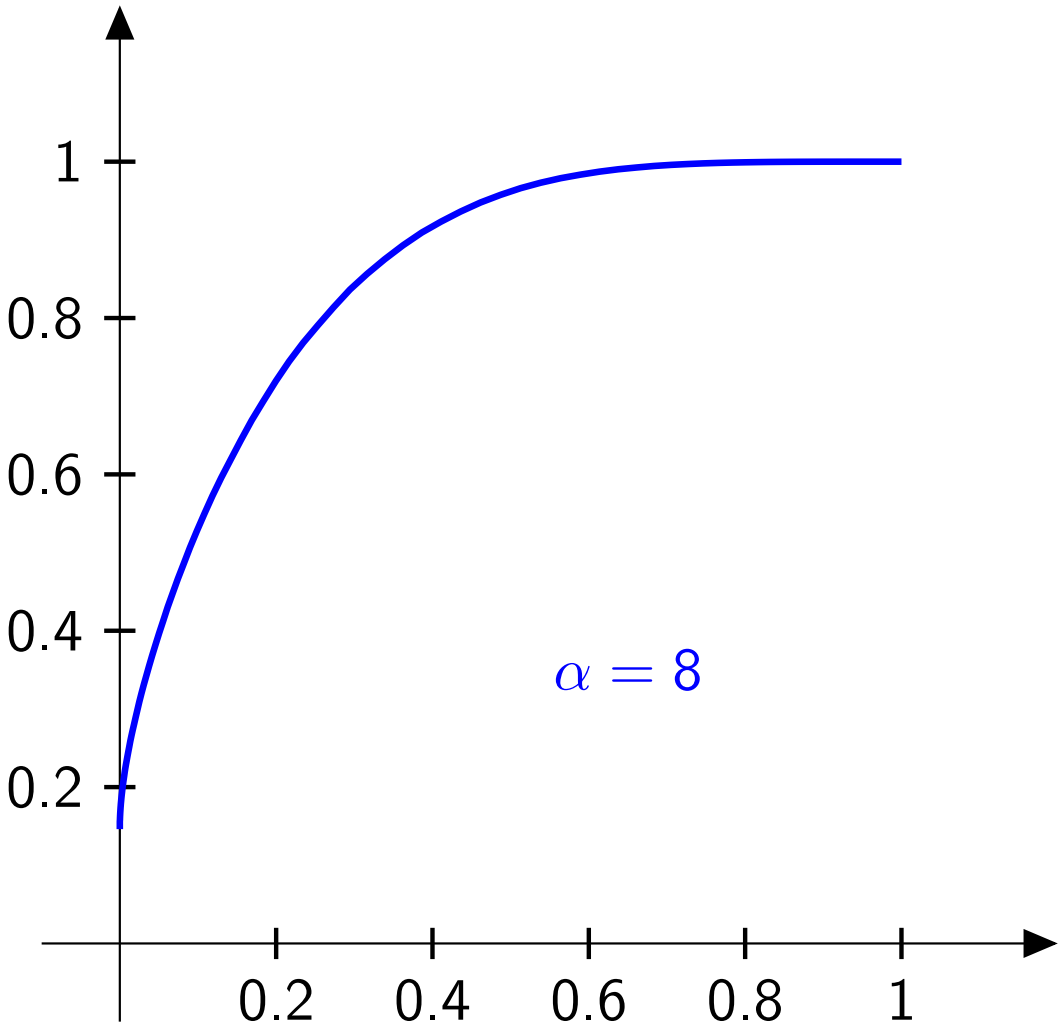

Numerical results

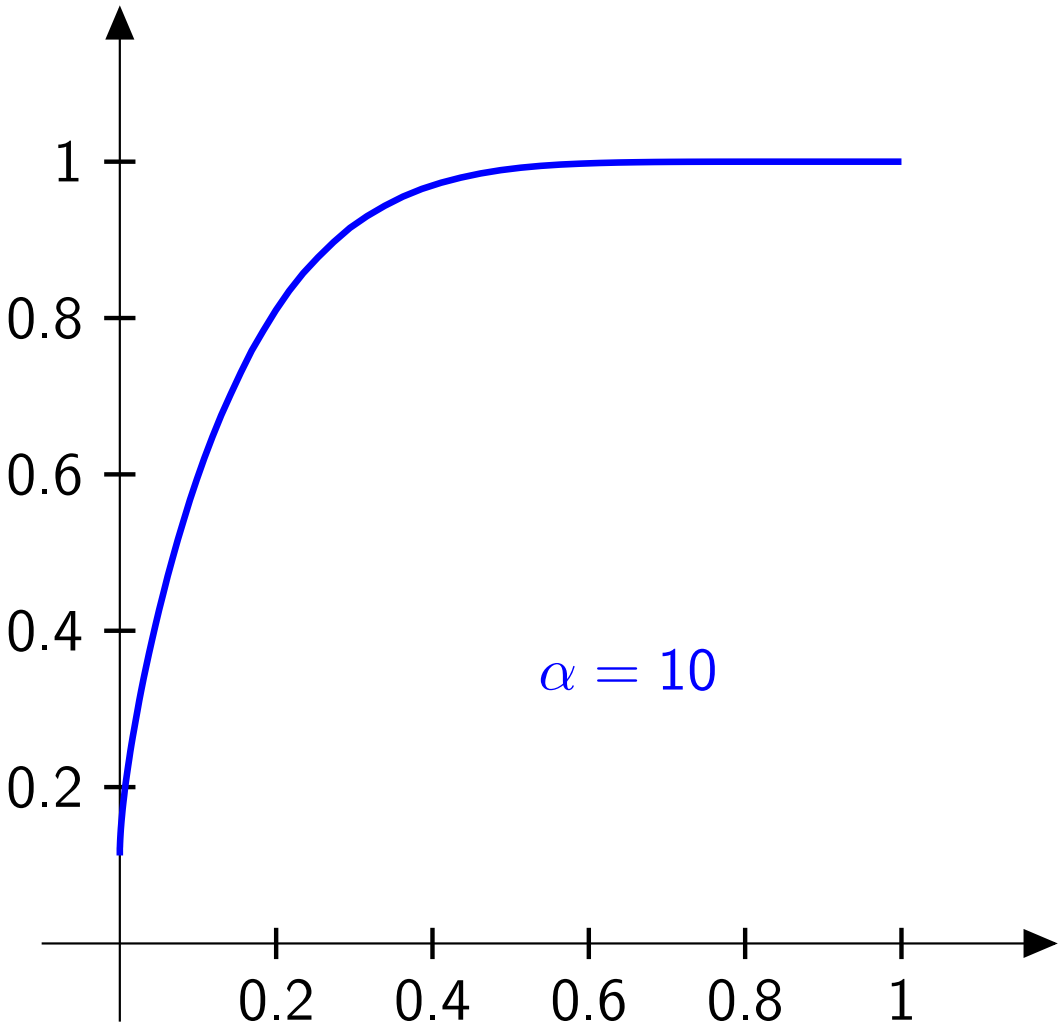

Numerical results

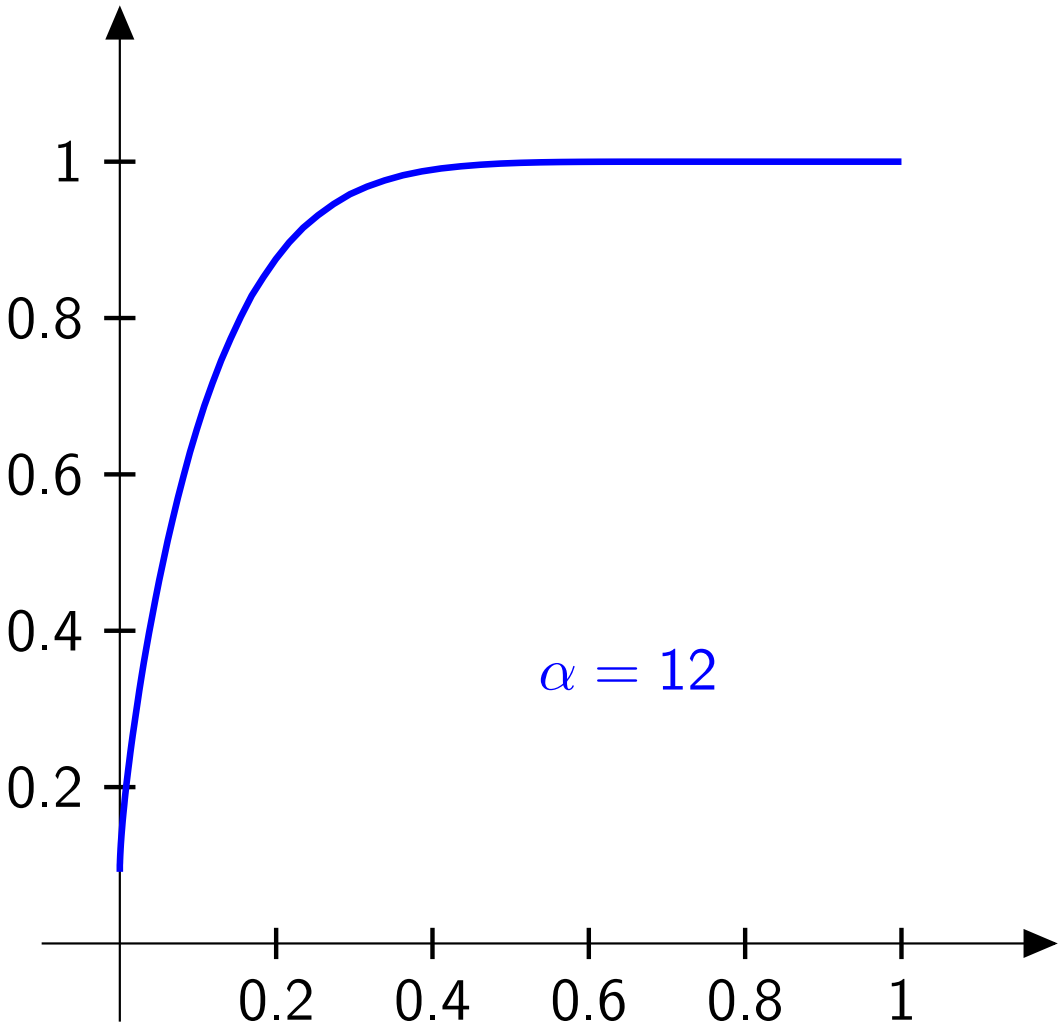

Numerical results