Recursive tree processes and the mean-field limit of stochastic flows

Jan M. Swart (Czech Academy of Sciences)

joint with Tibor Mach (Prague) A. Sturm (Göttingen)

Kohútka, February 7, 2019

Mean-field equations

Basic ingredients

(i) Polish space S *local state space.*

(ii) $(\Omega, \mathcal{B}, \mathbf{r})$ Polish space with Borel σ-field and finite measure: *source of external randomness.*

(iii) $\kappa : \Omega \to \mathbb{N}$ measurable function.

(iv) For each $\omega \in \Omega$, a measurable function $\gamma[\omega] : S^{\kappa(\omega)} \to S$.

Def $\mathcal{P}(S) :=$ the space of probability measures on S.
Def $\mathbf{T} : \mathcal{P}(S) \to \mathcal{P}(S)$ by

$$\mathbf{T}(\mu) := \text{ the law of } \gamma[\boldsymbol{\omega}](X_1, \ldots, X_{\kappa(\boldsymbol{\omega})}),$$

where $\boldsymbol{\omega}$ is an Ω-valued random variable with law $|\mathbf{r}|^{-1}\mathbf{r}$ and $(X_i)_{i \geq 1}$ are i.i.d. with law μ. We are interested in *mean-field equations* of the form

$$\tfrac{\partial}{\partial t}\mu_t = |\mathbf{r}|\big\{\mathbf{T}(\mu_t) - \mu_t\big\} \qquad (t \geq 0). \tag{1}$$

Cooperative branching

Define a *cooperative branching* map and *death* map by:

$$\mathtt{cob} : S^3 \to S \quad \text{with} \quad \mathtt{cob}(x_1, x_2, x_3) := x_1 \vee (x_2 \wedge x_3),$$
$$\mathtt{dth} : S^0 \to S \quad \text{with} \quad \mathtt{dth}(\varnothing) := 0,$$

and set $S = \{0, 1\}$, $\Omega = \{1, 2\}$,

$$\gamma[1] = \mathtt{cob} : S^3 \to S, \qquad \kappa(1) = 3, \qquad \mathbf{r}(\{1\}) = \alpha,$$
$$\gamma[2] = \mathtt{dth} : S^0 \to S, \qquad \kappa(2) = 0, \qquad \mathbf{r}(\{2\}) = 1.$$

Cooperative branching

We can rewrite the mean-field equation as

$$\frac{\partial}{\partial t}\mu_t = \alpha\big\{\mathbf{T}_{\mathtt{cob}}(\mu_t) - \mu_t\big\} + \big\{\mathbf{T}_{\mathtt{dth}}(\mu_t) - \mu_t\big\}, \tag{2}$$

with

$$\mathbf{T}_g(\mu) := \text{ the law of } g(X_1, \ldots, X_{\kappa(\omega)}),$$

where $(X_i)_{i\geq 1}$ are i.i.d. with law μ.
Define a (nonlinear) semigroup $(\mathbf{T}_t)_{t\geq 0}$ of operators acting on probability measures by

$$\mathbf{T}_t(\mu) := \mu_t \quad \text{where } (\mu_t)_{t\geq 0} \text{ solves (2) with } \mu_0 = \mu.$$

Claim $(\mathbf{T}_t)_{t\geq 0}$ is similar to the semigroup of a Markov chain, except that *time has a tree-like structure*.

A recursive tree representation

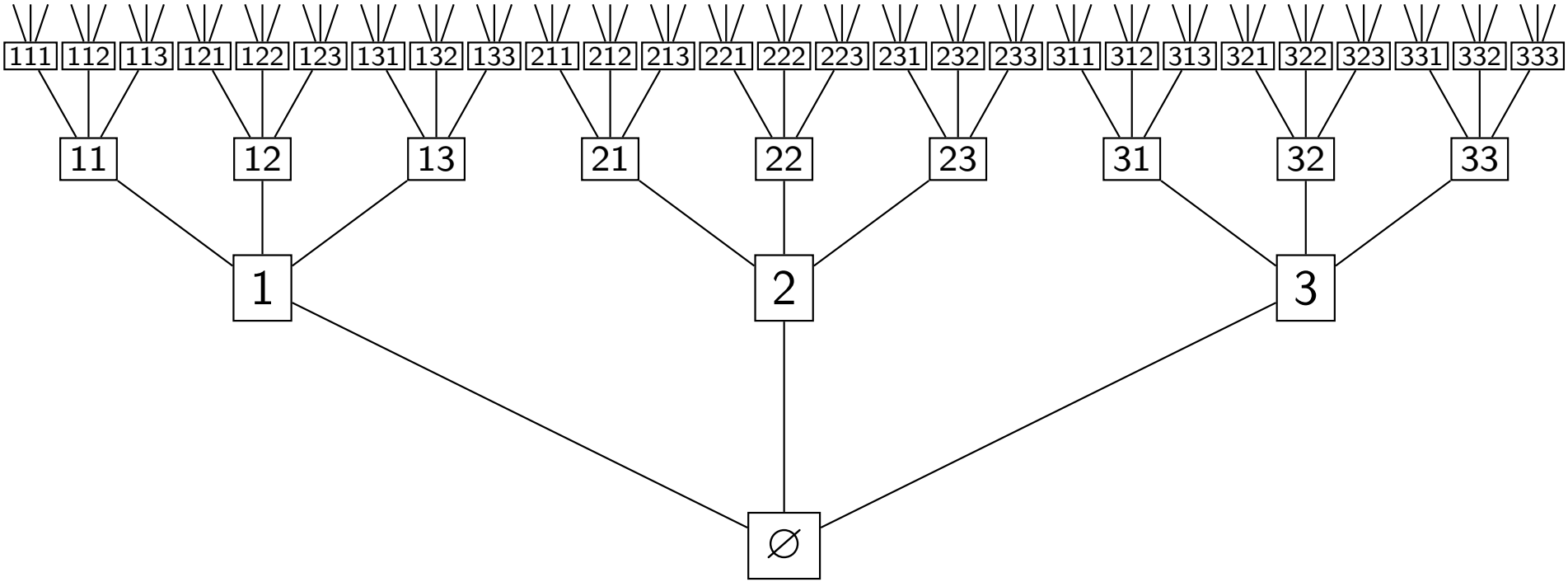

Fix d such that $\kappa(\omega) \leq d$ for all $\omega \in \Omega$.
Let $\mathbb{T}^d$ denote the space of all words $\mathbf{i} = i_1 \cdots i_n$ made from the alphabet $\{1, \ldots, d\}$ (if $d < \infty$) resp. $\mathbb{N}_+$ (if $d = \infty$).

A recursive tree representation

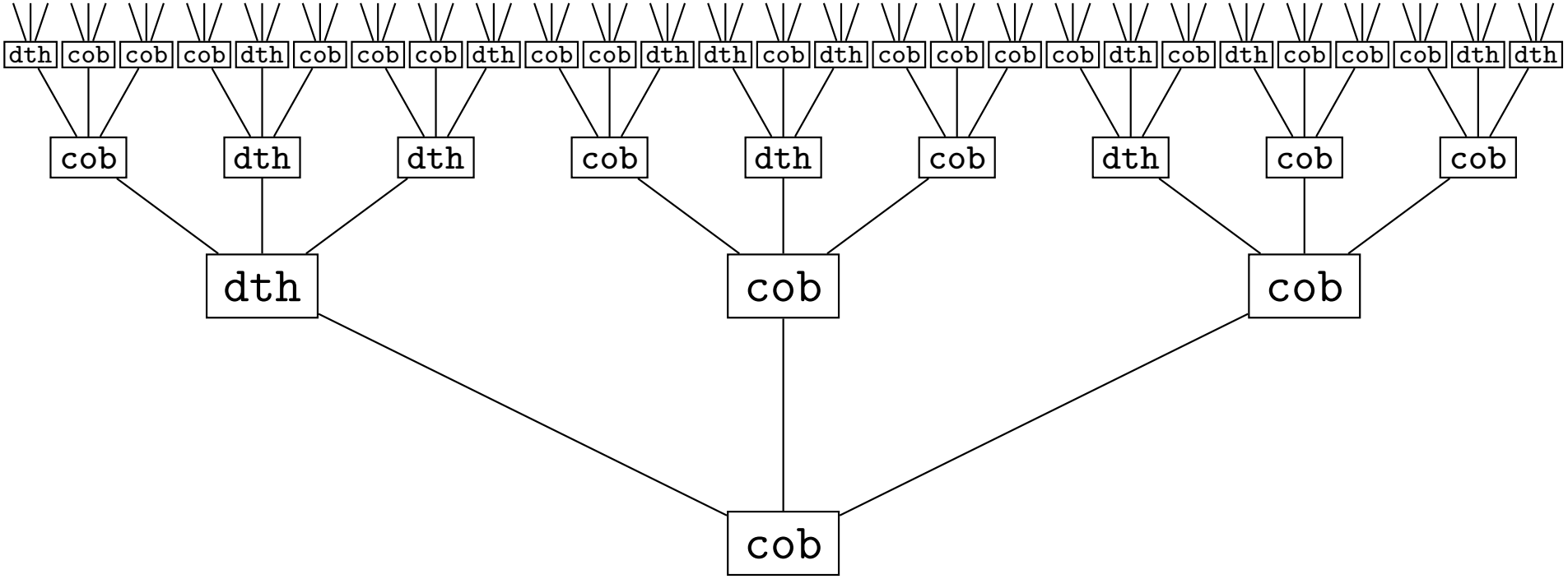

We attach i.i.d. $(\boldsymbol{\omega}_{\mathbf{i}})_{\mathbf{i}\in\mathbb{T}}$ with law $|\mathbf{r}|^{-1}\mathbf{r}$ to each node, which translate into maps $(\gamma[\boldsymbol{\omega}_{\mathbf{i}}])_{\mathbf{i}\in\mathbb{T}}$.

A recursive tree representation

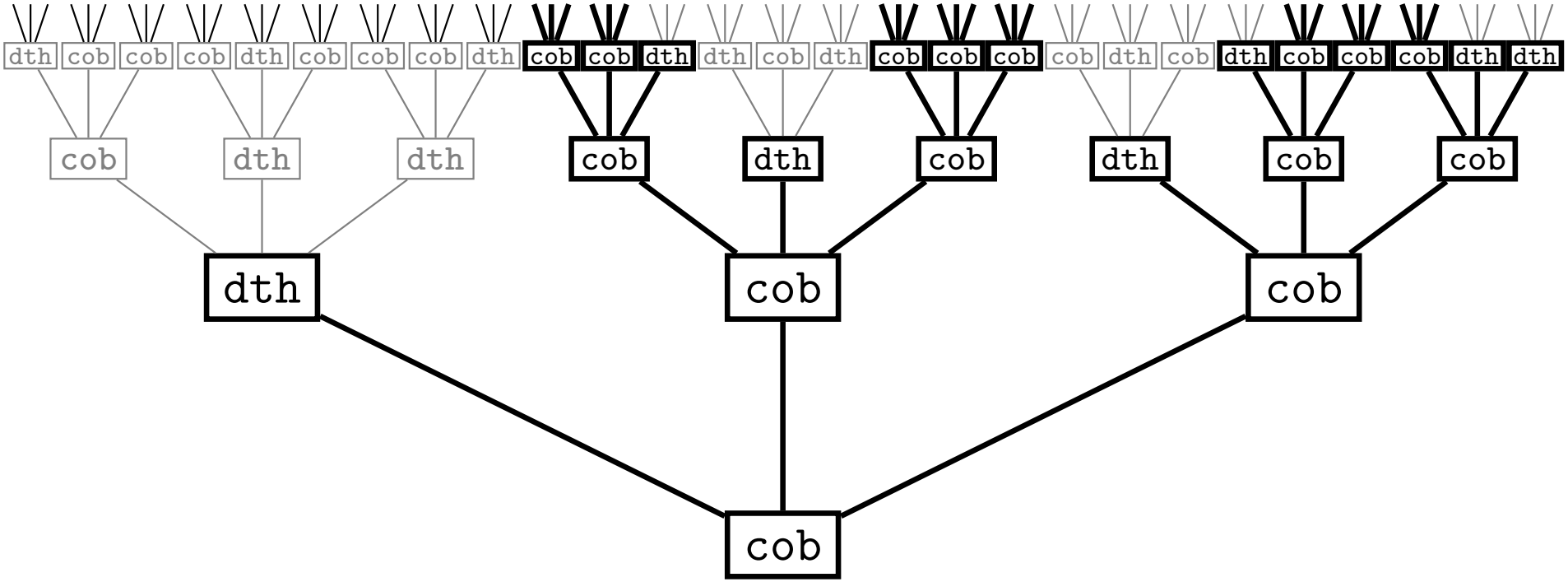

Let $\mathbb{S}$ be the random subtree of $\mathbb{T}$ defined as

$$\mathbb{S} := \left\{ i_1 \cdots i_n \in \mathbb{T} : i_m \leq \kappa(\boldsymbol{\omega}_{i_1 \cdots i_{m-1}}) \ \forall 1 \leq m \leq n \right\}.$$

A recursive tree representation

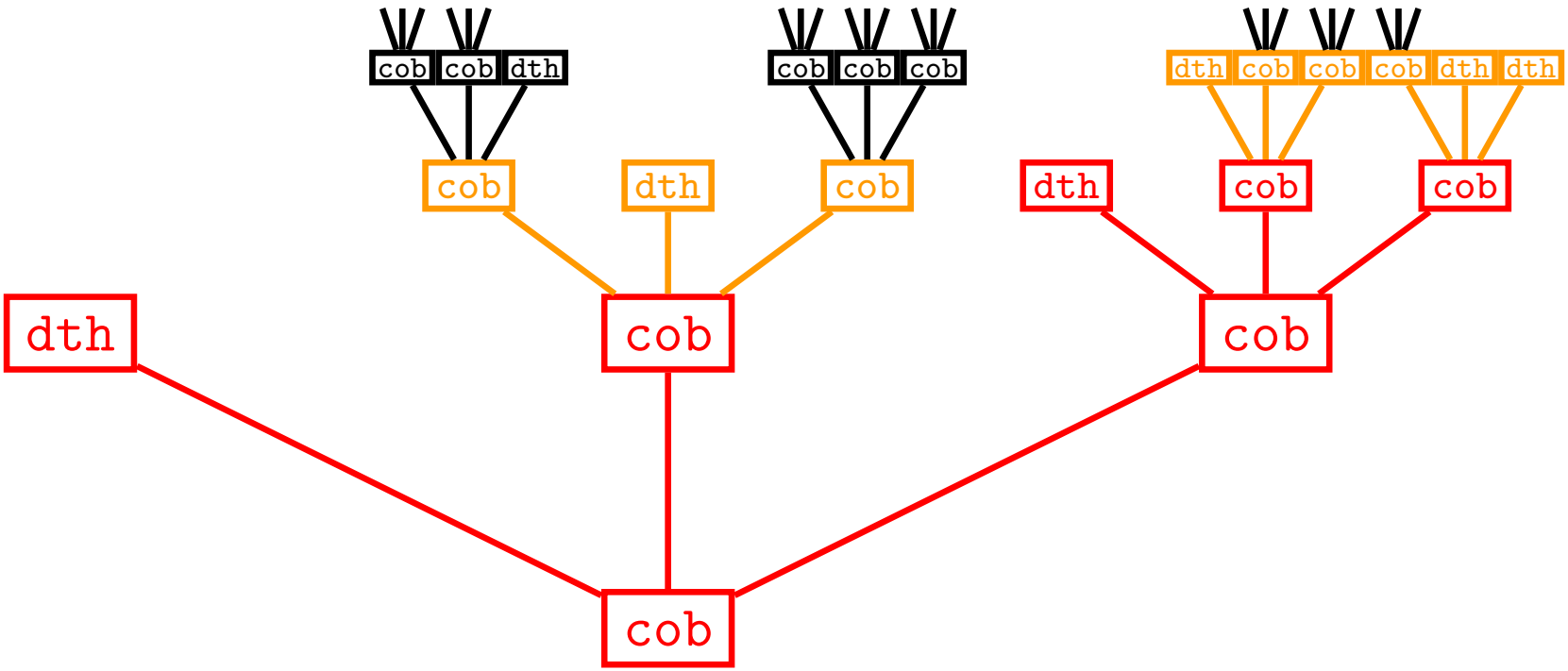

For any rooted subtree $\mathbb{U} \subset \mathbb{S}$, let

$$\nabla\mathbb{U} := \left\{ i_1 \cdots i_n \in \mathbb{S} : i_1 \cdots i_{n-1} \in \mathbb{U},\ i_1 \cdots i_n \notin \mathbb{U} \right\}$$

denote the boundary of $\mathbb{U}$ relative to $\mathbb{S}$.

A recursive tree representation

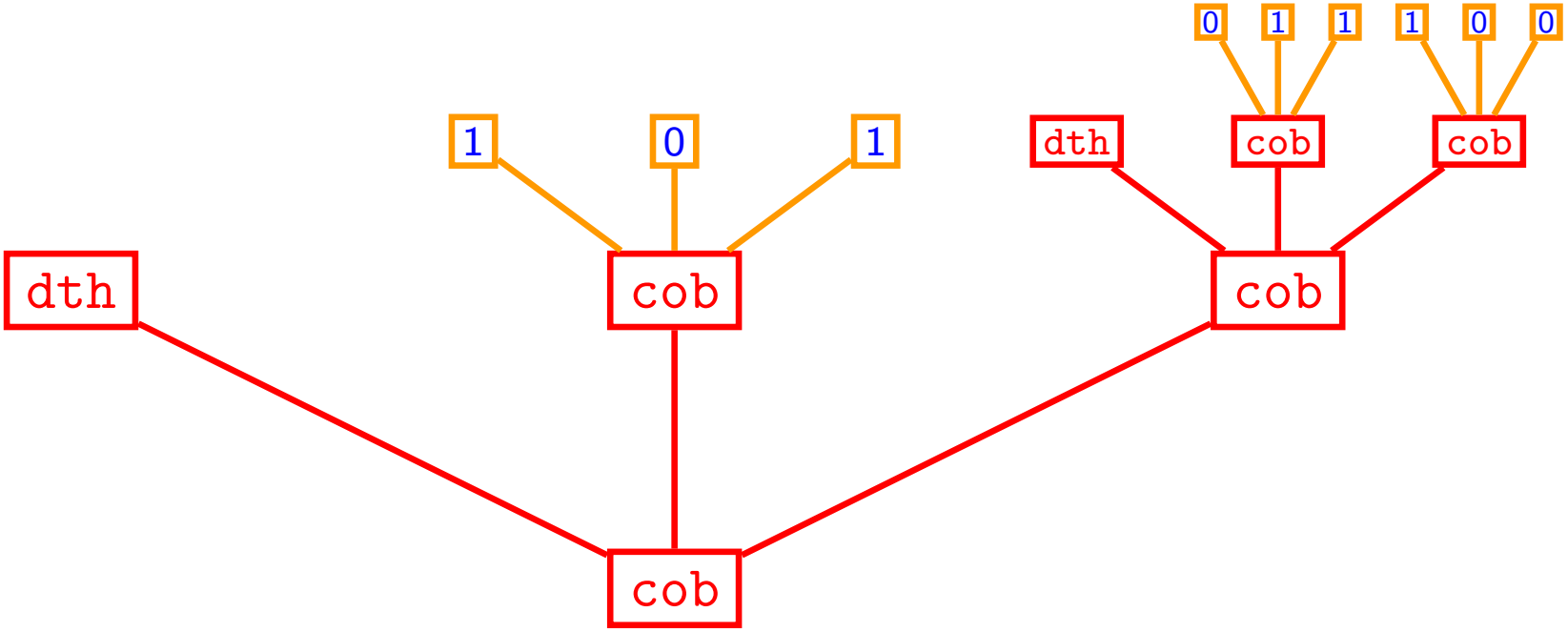

Given $(X_{\mathbf{i}})_{\mathbf{i}\in\nabla\mathbb{U}}$, we inductively define $(X_{\mathbf{i}})_{\mathbf{i}\in\mathbb{U}}$ by

$$X_{\mathbf{i}} = \gamma[\omega_{\mathbf{i}}]\big(X_{\mathbf{i}1},\ldots,X_{\mathbf{i}\kappa(\omega)}\big) \qquad (\mathbf{i}\in\mathbb{U}).$$

A recursive tree representation

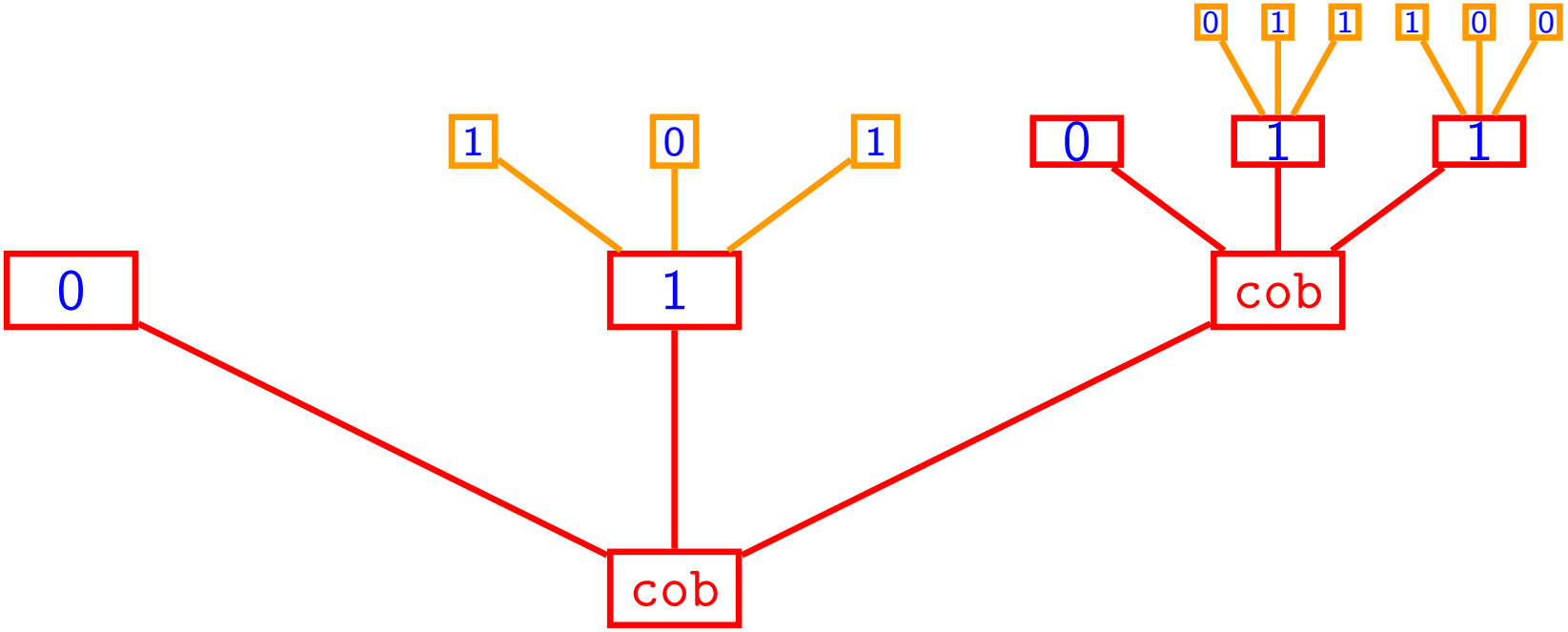

Given $(X_{\mathbf{i}})_{\mathbf{i}\in\nabla\mathbb{U}}$, we inductively define $(X_{\mathbf{i}})_{\mathbf{i}\in\mathbb{U}}$ by

$$X_{\mathbf{i}} = \gamma[\omega_{\mathbf{i}}]\big(X_{\mathbf{i}1},\ldots,X_{\mathbf{i}\kappa(\omega)}\big) \qquad (\mathbf{i}\in\mathbb{U}).$$

A recursive tree representation

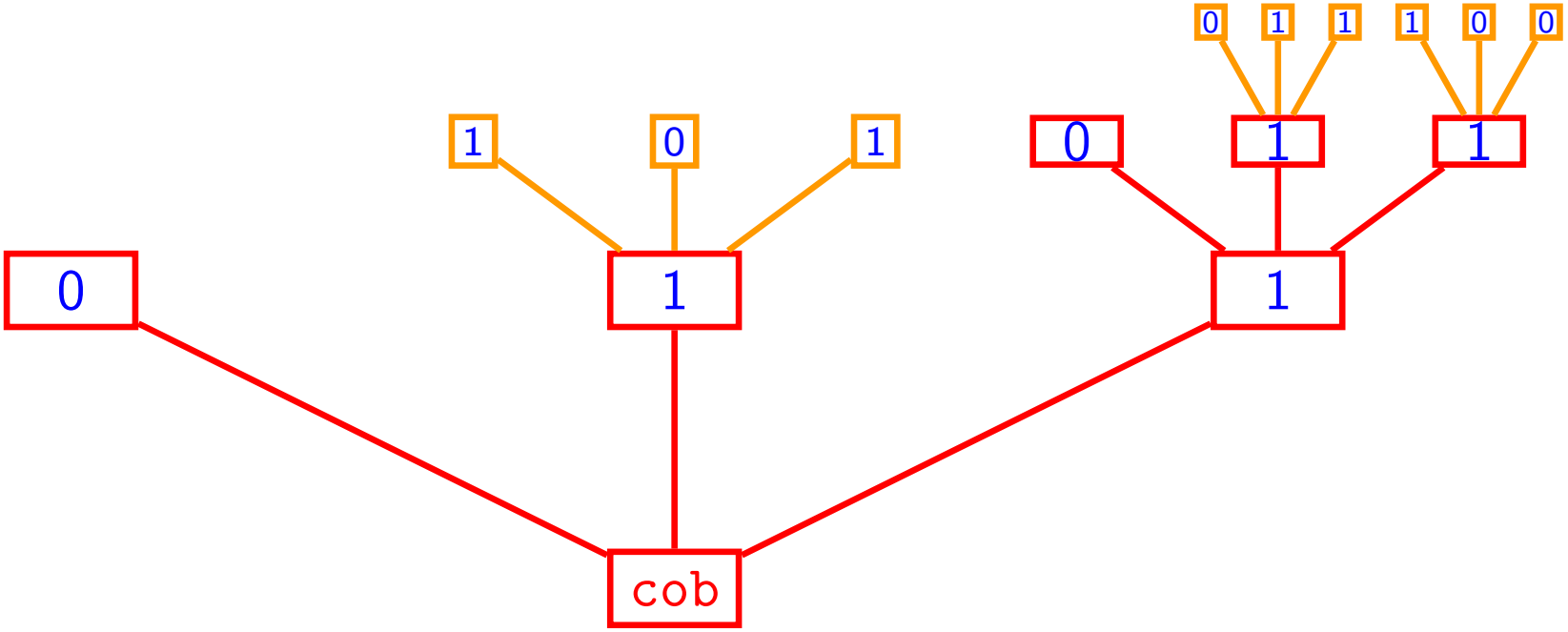

Given $(X_{\mathbf{i}})_{\mathbf{i}\in\nabla\mathbb{U}}$, we inductively define $(X_{\mathbf{i}})_{\mathbf{i}\in\mathbb{U}}$ by

$$X_{\mathbf{i}} = \gamma[\omega_{\mathbf{i}}]\big(X_{\mathbf{i}1},\ldots,X_{\mathbf{i}\kappa(\omega)}\big) \qquad (\mathbf{i}\in\mathbb{U}).$$

A recursive tree representation

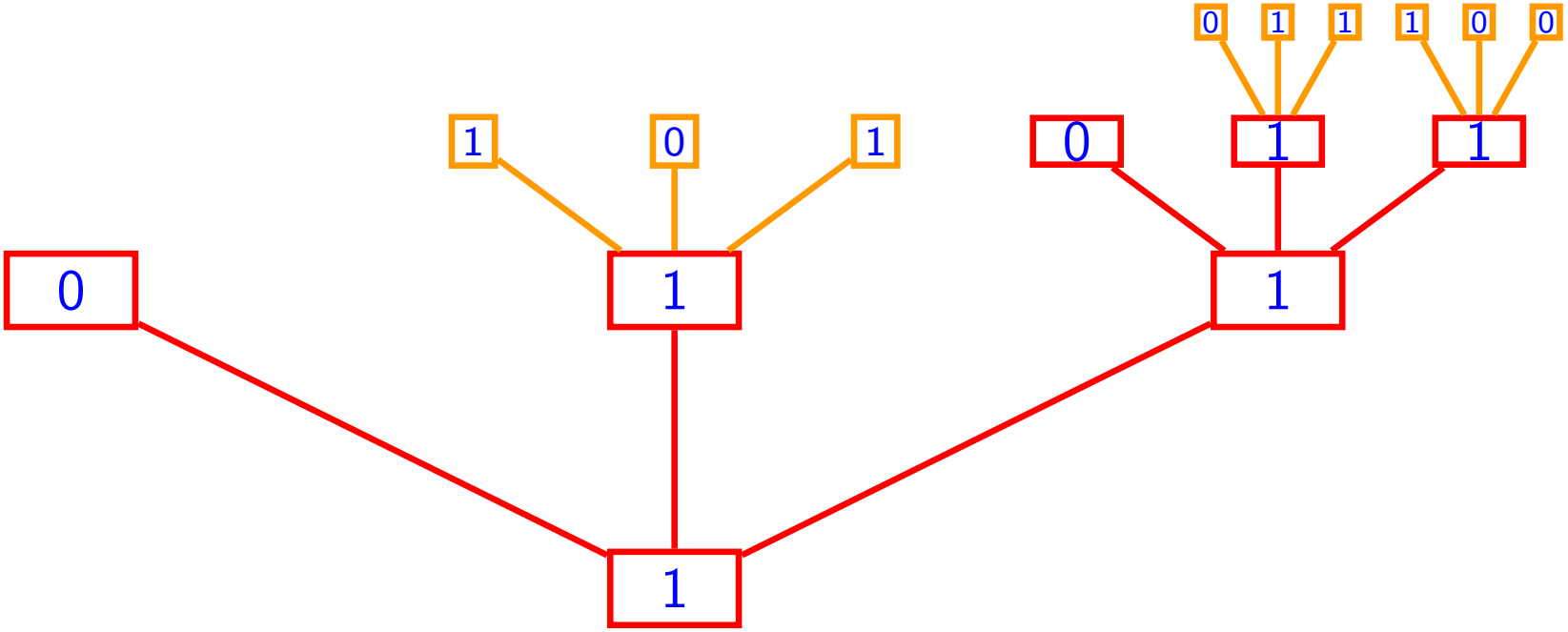

Given $(X_{\mathbf{i}})_{\mathbf{i}\in\nabla\mathbb{U}}$, we inductively define $(X_{\mathbf{i}})_{\mathbf{i}\in\mathbb{U}}$ by

$$X_{\mathbf{i}} = \gamma[\omega_{\mathbf{i}}]\big(X_{\mathbf{i}1},\ldots,X_{\mathbf{i}\kappa(\omega)}\big) \qquad (\mathbf{i}\in\mathbb{U}).$$

A recursive tree representation

Setting

$$G_{\mathbb{U}}\big((X_{\mathbf{i}})_{\mathbf{i}\in\nabla\mathbb{U}}\big) := X_{\varnothing}$$

defines a random map

$$G_{\mathbb{U}} : \mathbb{S}^{\nabla\mathbb{U}} \to \mathbb{S}$$

that is the concatenation of the maps $\big(\gamma[\omega_{\mathbf{i}}]\big)_{\mathbf{i}\in\mathbb{U}}$ according to the tree structure of $\mathbb{U}$.

Let $|i_1 \cdots i_n| := n$ denote the length of a word $\mathbf{i}$ and set

$$\mathbb{S}_{(n)} := \{\mathbf{i} \in \mathbb{S} : |\mathbf{i}| < n\} \quad \text{and} \quad \nabla\mathbb{S}_{(n)} = \{\mathbf{i} \in \mathbb{S} : |\mathbf{i}| = n\}.$$

Aldous and Bandyopadyay (2005) observed that

$$\mathbf{T}^n(\mu) := \text{ the law of } G_{\mathbb{S}_{(n)}}\big((X_{\mathbf{i}})_{\mathbf{i}\in\nabla\mathbb{S}_{(n)}}\big),$$

where $(X_{\mathbf{i}})_{\mathbf{i}\in\nabla\mathbb{S}_{(n)}}$ are i.i.d. with law μ and independent of $(\omega_{\mathbf{i}})_{\mathbf{i}\in\mathbb{S}_{(n)}}$.

A recursive tree representation

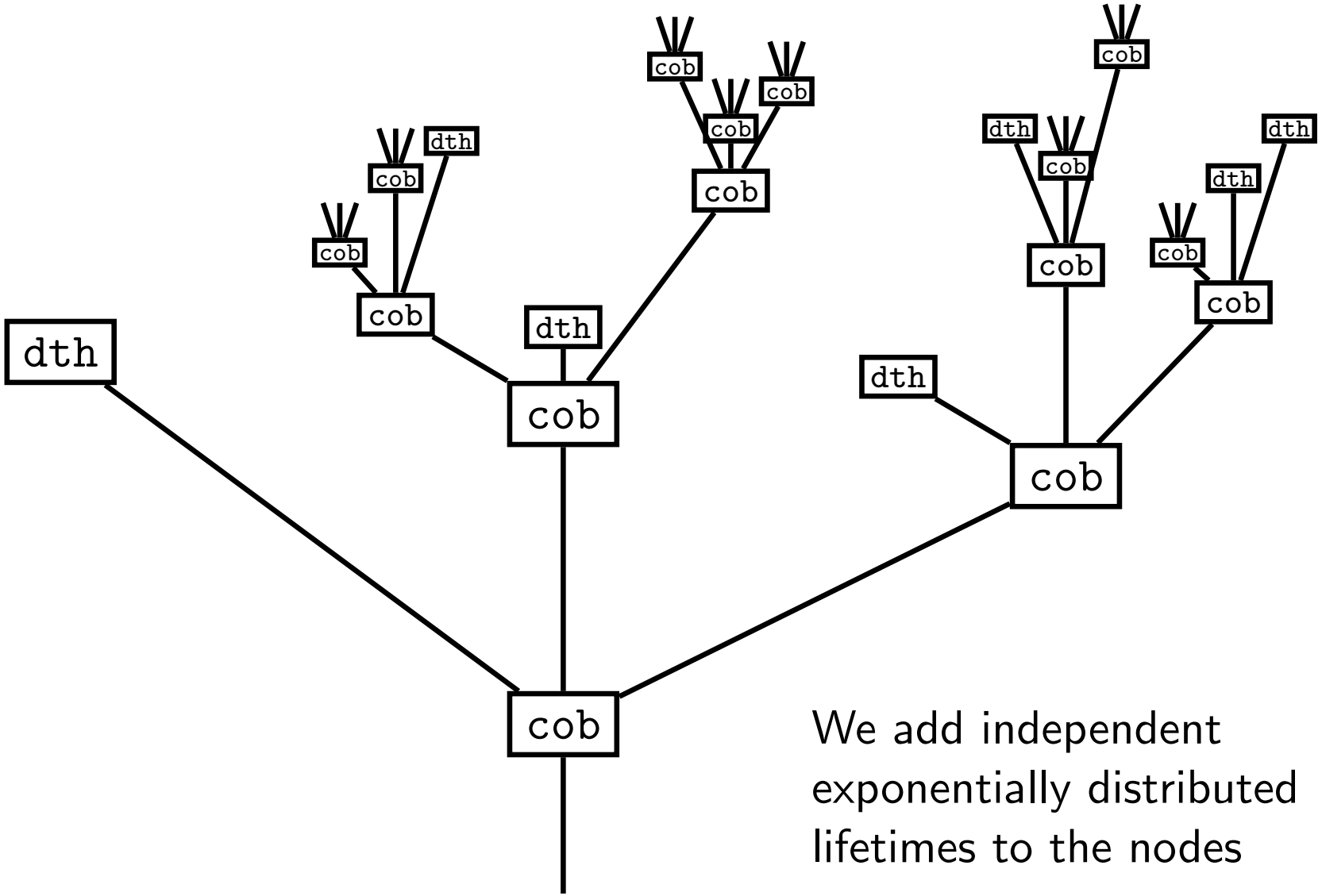

We add independent exponentially distributed lifetimes to the nodes

A recursive tree representation

Let $(\sigma_{\mathbf{i}})_{\mathbf{i}\in\mathbb{T}}$ be i.i.d. exponentially distributed with mean $|\mathbf{r}|^{-1}$, independent of $(\omega_{\mathbf{i}})_{\mathbf{i}\in\mathbb{T}}$, and set

$$\tau_{\mathbf{i}}^* := \sum_{m=1}^{n-1} \sigma_{i_1\cdots i_m} \quad \text{and} \quad \tau_{\mathbf{i}}^\dagger := \tau_{\mathbf{i}}^* + \sigma_{\mathbf{i}} \qquad (\mathbf{i} = i_1 \cdots i_n),$$

$$\mathbb{S}_t := \{\mathbf{i} \in \mathbb{S} : \tau_{\mathbf{i}}^\dagger \leq t\} \quad \text{and} \quad \nabla\mathbb{S}_t = \{\mathbf{i} \in \mathbb{S} : \tau_{\mathbf{i}}^* \leq t < \tau_{\mathbf{i}}^\dagger\}.$$

Let $\mathcal{F}_t$ be the filtration

$$\mathcal{F}_t := \sigma\big(\nabla\mathbb{S}_t, (\omega_{\mathbf{i}}, \sigma_{\mathbf{i}})_{\mathbf{i}\in\mathbb{S}_t}\big) \qquad (t \geq 0).$$

Theorem [Mach, Sturm, S. '18]

$$\mathbf{T}_t(\mu) := \text{ the law of } G_{\mathbb{S}_t}\big((X_{\mathbf{i}})_{\mathbf{i}\in\nabla\mathbb{S}_t}\big),$$

where $(X_{\mathbf{i}})_{\mathbf{i}\in\nabla\mathbb{S}_t}$ are i.i.d. with law μ and independent of $\mathcal{F}_t$.

A recursive tree representation

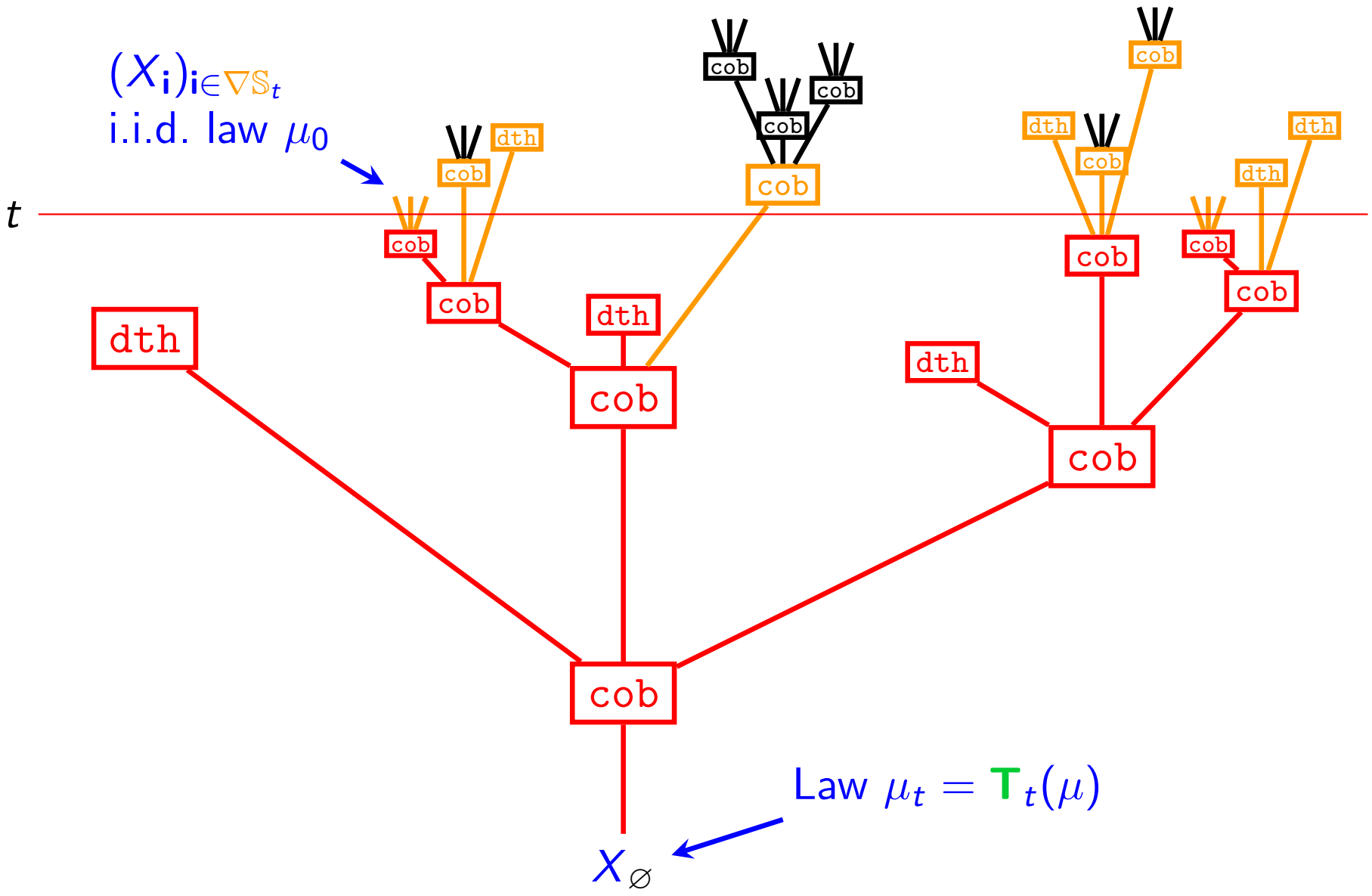

The mean-field equation

Theorem [Mach, Sturm, S. '18] Assume that

$$\int_\Omega \mathbf{r}(\mathrm{d}\omega)\,\kappa(\omega) < \infty \tag{3}$$

Then for each initial state, the mean-field equation (1) has a unique solution.

In our example, the mean-field equation is

$$\tfrac{\partial}{\partial t}\mu_t = \alpha\big\{\mathbf{T}_{\mathtt{cob}}(\mu_t) - \mu_t\big\} + \big\{\mathbf{T}_{\mathtt{dth}}(\mu_t) - \mu_t\big\}.$$

Rewriting this in terms of $p_t := \mu_t(\{1\})$ yields

$$\tfrac{\partial}{\partial t}p_t = \alpha p_t^2(1-p_t) - p_t =: F_\alpha(p_t) \qquad (t \geq 0).$$

Cooperative branching

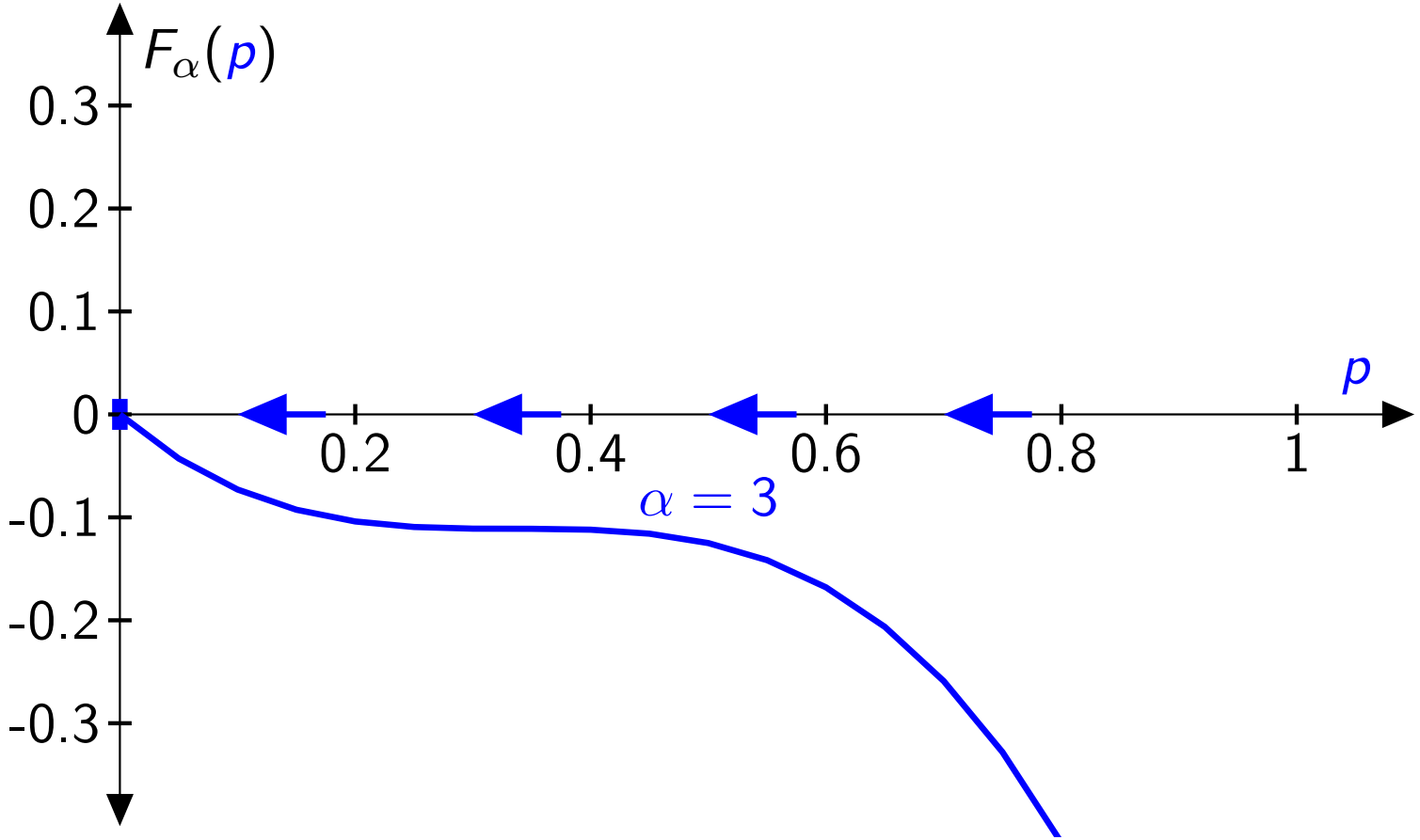

For $\alpha < 4$, the equation $\frac{\partial}{\partial t} p_t = F_\alpha(p_t)$ has a single, stable fixed point $p = 0$.

Cooperative branching

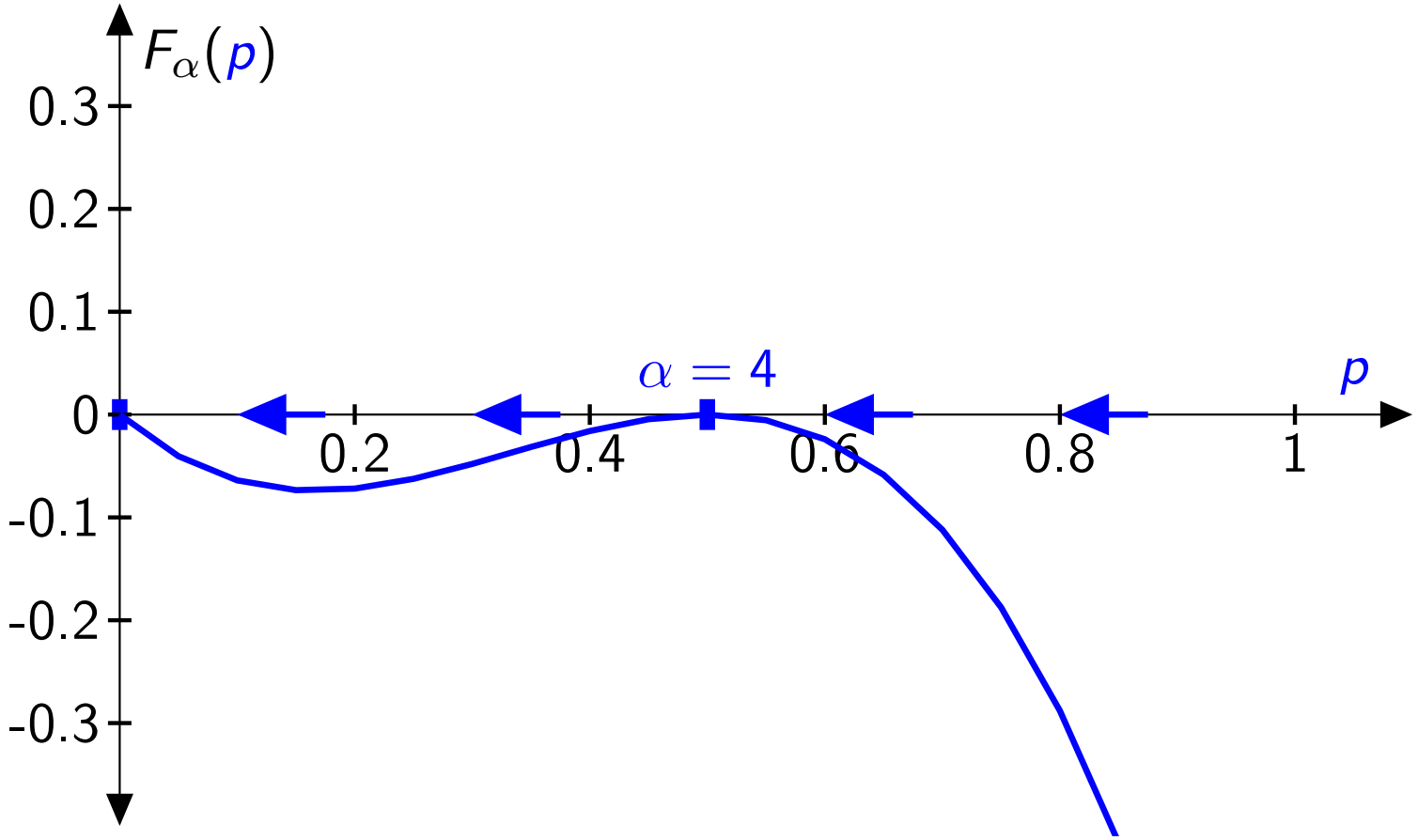

For $\alpha = 4$, a second fixed point appears at $p = 0.5$.

Cooperative branching

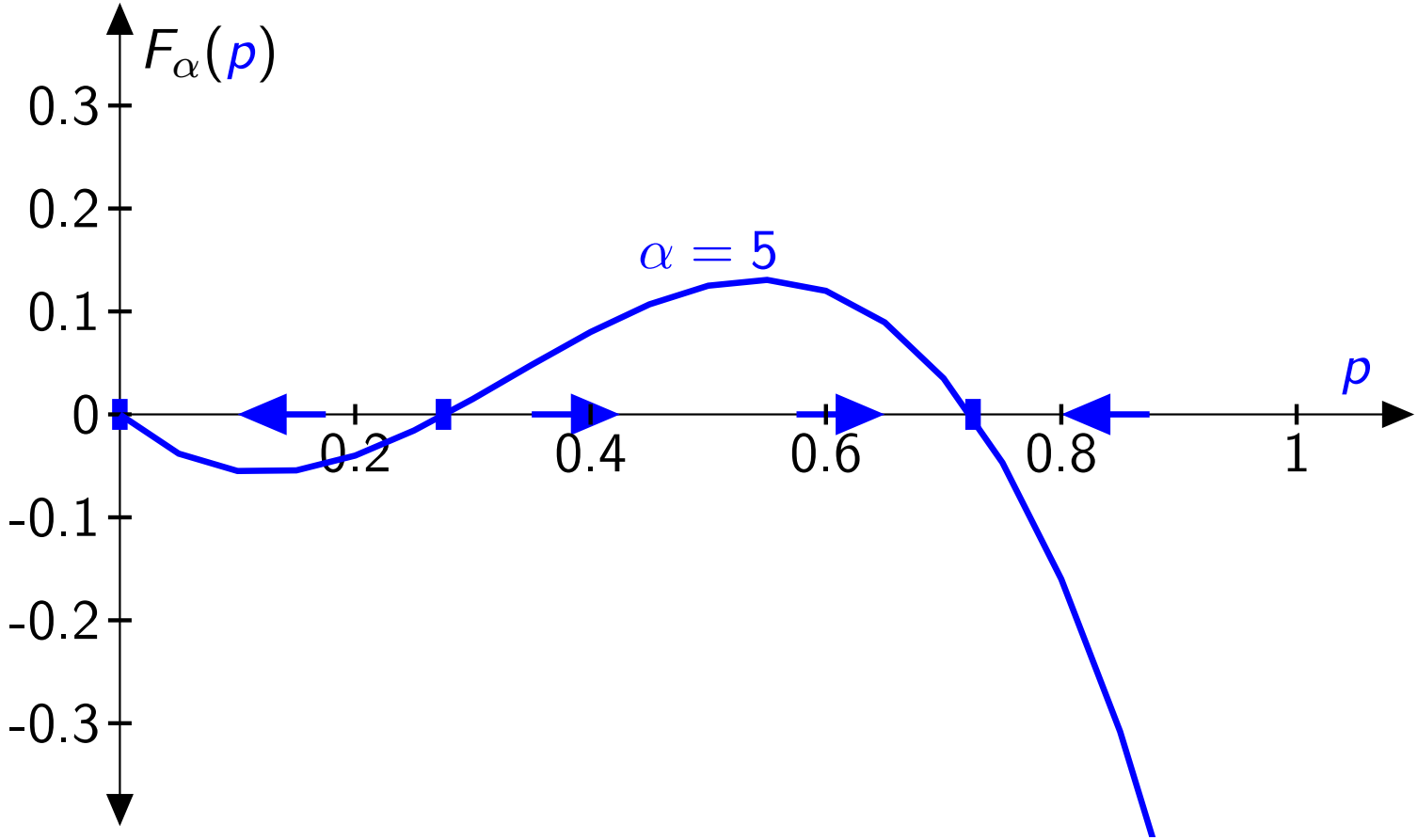

For $\alpha > 4$, there are two stable fixed points and one unstable fixed point, which separates the domains of attraction of the other two.

Cooperative branching

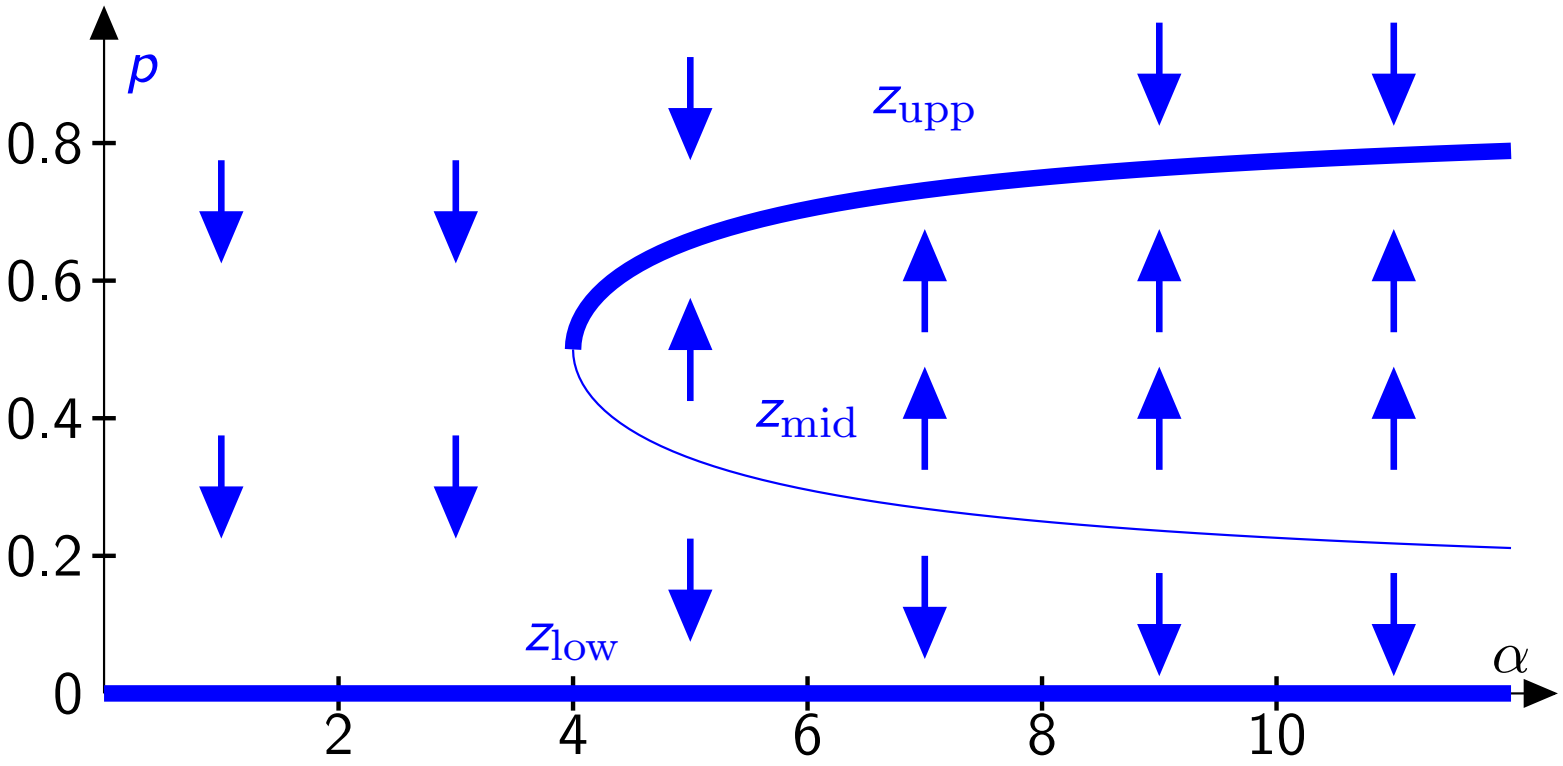

Fixed points of $\frac{\partial}{\partial t} p_t = F_\alpha(p_t)$ for different values of α.

Recursive Tree Processes

A *Recursive Distributional Equation* is an equation of the form

$$X \stackrel{\mathrm{d}}{=} \gamma[\omega](X_1, \ldots, X_{\kappa(\omega)}) \qquad \text{(RDE)},$$

where $X_1, X_2, \ldots$ are i.i.d. copies of X, independent of ω.

A law ν solves (RDE) iff

$$\text{(i)} \quad \mathbf{T}_t(\nu) = \nu \quad (t \geq 0) \qquad \text{or} \qquad \text{(ii)} \quad \mathbf{T}(\nu) = \nu.$$

We can view ν as the "invariant law" of a "Markov chain" where time has a tree-like structure.

In our example, solutions to the RDE are the Bernoulli distributions ν_{low}, ν_{mid}, ν_{upp} with density z_{low}, z_{mid}, z_{upp}.

Recursive Tree Processes

For each solution ν of (RDE), there exists a *Recursive Tree Process (RTP)* $(\boldsymbol{\omega}_{\mathbf{i}}, \mathbf{X}_{\mathbf{i}})_{\mathbf{i}\in\mathbb{T}}$, unique in law, such that:

(i) $(\boldsymbol{\omega}_{\mathbf{i}})_{\mathbf{i}\in\mathbb{T}}$ are i.i.d. with law $|\mathbf{r}|^{-1}\mathbf{r}$.

(ii) For finite $\mathbb{U} \subset \mathbb{T}$, the r.v.'s $(\mathbf{X}_{\mathbf{i}})_{\mathbf{i}\in\partial\mathbb{U}}$ are i.i.d. with ν and independent of $(\boldsymbol{\omega}_{\mathbf{i}})_{\mathbf{i}\in\mathbb{U}}$.

(iii) $\mathbf{X}_{\mathbf{i}} = \gamma[\boldsymbol{\omega}_{\mathbf{i}}]\big(\mathbf{X}_{\mathbf{i}1}, \ldots, \mathbf{X}_{\mathbf{i}\kappa(\boldsymbol{\omega}_{\mathbf{i}})}\big) \qquad (\mathbf{i} \in \mathbb{T})$.

If we add independent exponentially distributed lifetimes, then:

- Conditional on $\mathcal{F}_t$, the r.v.'s $(\mathbf{X}_{\mathbf{i}})_{\mathbf{i}\in\nabla\mathbb{S}_t}$ are i.i.d. with law ν.

Aldous and Bandyopadyay (RDE) say that an RTP is *endogenous* if

$$\mathbf{X}_{\varnothing} \text{ is measurable w.r.t. the } \sigma\text{-field generated by } (\boldsymbol{\omega}_{\mathbf{i}})_{\mathbf{i}\in\mathbb{T}}.$$

They showed that endogeny is equivalent to *bivariate uniqueness*.

n-Variate processes

For each $n \geq 1$, a measurable map $g : S^k \to S$ gives rise to *n-variate map* $g^{(n)} : (S^n)^k \to S^n$ defined as

$$g^{(n)}(x_1, \ldots, x_k) = g^{(n)}(x^1, \ldots, x^n) := \big(g(x^1), \ldots, g(x^n)\big),$$

with $x = (x_i^m)_{i=1,\ldots,k}^{m=1,\ldots,n}$, $x_i = (x_i^1, \ldots, x_i^n)$, $x^m = (x_1^m, \ldots, x_k^m)$.

We define an *n-variate map*

$$\mathbf{T}^{(n)}(\mu^{(n)}) := \text{ the law of } \gamma^{(n)}[\boldsymbol{\omega}](X_1, \ldots, X_{\kappa(\boldsymbol{\omega})}),$$

which acts on probability measures $\mu^{(n)}$ on S^n.
The *n-variate mean-field equation*

$$\tfrac{\partial}{\partial t}\mu_t^{(n)} = |\mathbf{r}|\big\{\mathbf{T}^{(n)}(\mu_t^{(n)}) - \mu_t^{(n)}\big\} \qquad (t \geq 0).$$

describes the mean-field limit of n coupled processes that are constructed using the same random maps.

n-Variate processes

$\mathcal{P}(S)$	space of probability measures on S.
$\mathcal{P}_{\rm sym}(S^n)$	space of probability measures on S^n that are symmetric under a permutation of the coordinates.
$S^n_{\rm diag}$	$\{x \in S^n : x_1 = \cdots = x_n\}$
$\mathcal{P}(S^n)_\mu$	space of probability measures on S^n whose one-dimensional marginals are all equal to μ.

- If $(\mu_t^{(n)})_{t\geq 0}$ solves the n-variate equation, then its m-dimensional marginals solve the m-variate equation.
- $\mu_0^{(n)} \in \mathcal{P}_{\rm sym}(S^n)$ implies $\mu_t^{(n)} \in \mathcal{P}_{\rm sym}(S^n)$ $(t \geq 0)$.
- $\mu_0^{(n)} \in \mathcal{P}(S^n_{\rm diag})$ implies $\mu_t^{(n)} \in \mathcal{P}(S^n_{\rm diag})$ $(t \geq 0)$.
- If $\mathbf{T}(\nu) = \nu$, then $\mu_0^{(n)} \in \mathcal{P}(S^n)_\nu$ implies $\mu_t^{(n)} \in \mathcal{P}(S^n)_\nu$.

n-Variate processes

If $\nu = \mathbb{P}[X \in \cdot\,]$ solves the RDE $\mathbf{T}(\nu) = \nu$, then

$$\overline{\nu}^{(n)} := \mathbb{P}\big[(\underbrace{X, \ldots, X}_{n \text{ times}}) \in \cdot\,\big]$$

solves the *n-variate RDE* $\mathbf{T}^{(n)}(\nu^{(n)}) = \nu^{(n)}$.

Questions:

- Is $\overline{\nu}^{(n)}$ a stable fixed point of the n-variate equation?
- Is $\overline{\nu}^{(n)}$ the only solution in $\mathcal{P}_{\mathrm{sym}}(S^n)_\nu$ of the n-variate RDE?

n-Variate processes

Let $(\boldsymbol{\omega}_{\mathbf{i}}, \mathbf{X}_{\mathbf{i}})_{\mathbf{i}\in\mathbb{T}}$ be the RTP corresponding to a solution ν of the RDE. Recall that the RTP is *endogenous* if

$$\mathbf{X}_{\varnothing} \text{ is measurable w.r.t. the } \sigma\text{-field generated by } (\boldsymbol{\omega}_{\mathbf{i}})_{\mathbf{i}\in\mathbb{T}}.$$

Theorem [AB '05 & MSS '18] The following statements are equivalent:

(i) The RTP corresponding to ν is endogenous.

(ii) $\mathbf{T}_t^{(n)}(\mu) \underset{t\to\infty}{\Longrightarrow} \overline{\nu}^{(n)}$ for all $\mu \in \mathcal{P}(S^n)_\nu$ and $n \geq 1$.

(iii) $\overline{\nu}^{(2)}$ is the only solution in $\mathcal{P}_{\mathrm{sym}}(S^2)_\nu$ of the bivariate RDE.

n-Variate processes

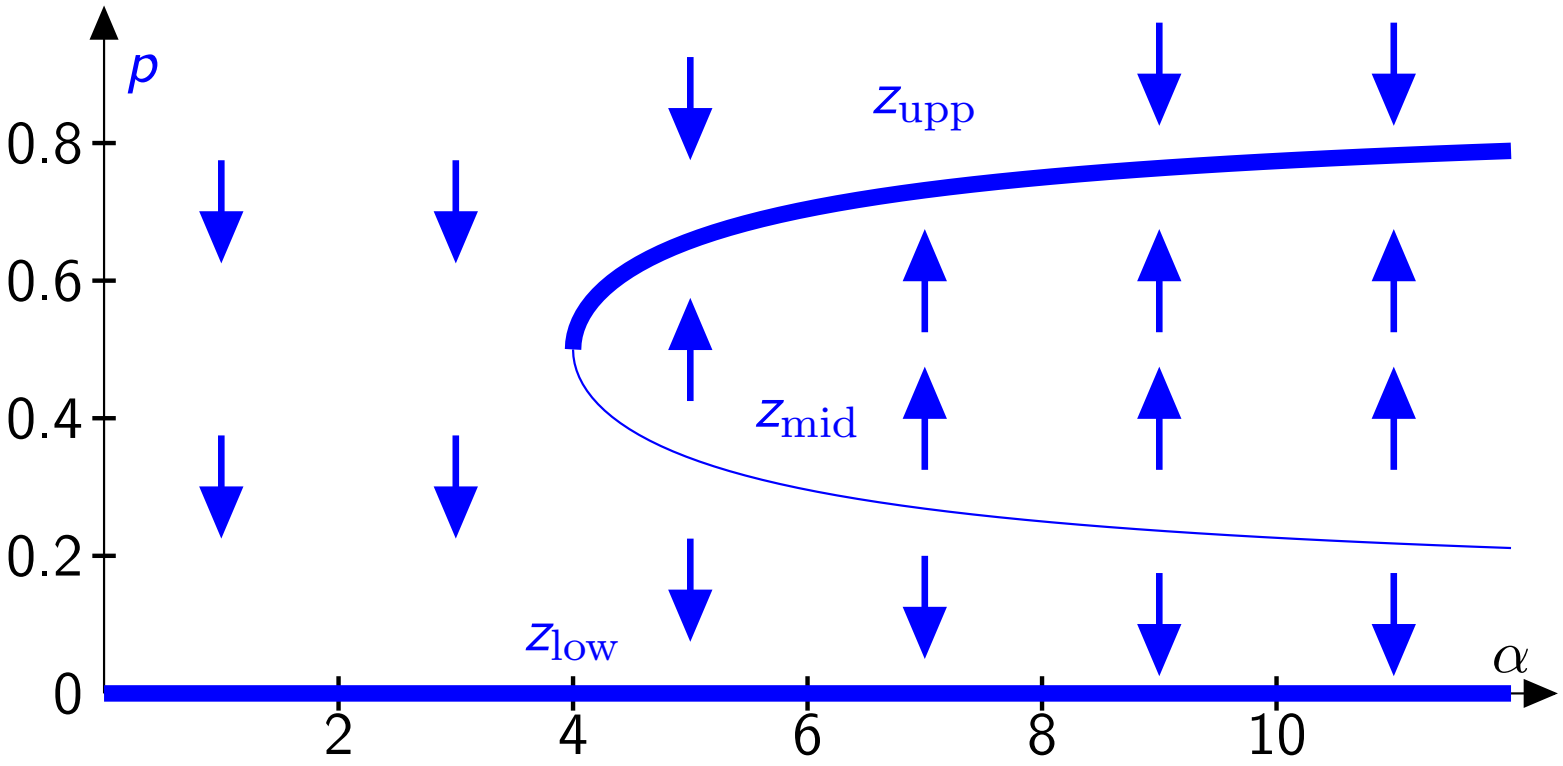

Fixed points of $\frac{\partial}{\partial t} p_t = F_\alpha(p_t)$ for different values of α.

n-Variate processes

The RDE $\mathbf{T}(\nu) = \nu$ has three solutions $\nu_{\rm low}, \nu_{\rm mid}$, and $\nu_{\rm upp}$, where $\nu_{\ldots}$ is the probability measure on $\{0,1\}$ with mean $\nu_{\ldots}(\{1\}) = z_{\ldots}$ $(\ldots = {\rm low}, {\rm mid}, {\rm upp})$, which

give rise to solutions $\overline{\nu}^{(2)}_{\rm low}, \overline{\nu}^{(2)}_{\rm mid}$, and $\overline{\nu}^{(2)}_{\rm upp}$ of the *bivariate RDE.*

Proposition [Mach, Sturm, S. '18] Apart from $\overline{\nu}^{(2)}_{\rm low}, \overline{\nu}^{(2)}_{\rm mid}, \overline{\nu}^{(2)}_{\rm upp}$, the *bivariate RDE* has one more solution $\underline{\nu}^{(2)}_{\rm mid}$ in $\mathcal{P}_{\rm sym}(S^2)$. The domains of attraction are:

$$
\begin{array}{ll}
\overline{\nu}^{(2)}_{\rm low}: & \big\{\mu_0^{(2)} : \mu_0^{(1)}(\{1\}) < z_{\rm mid}\big\}, \\
\underline{\nu}^{(2)}_{\rm mid}: & \big\{\mu_0^{(2)} : \mu_0^{(1)}(\{1\}) = z_{\rm mid},\ \mu_0^{(2)} \neq \overline{\nu}^{(2)}_{\rm mid}\big\}, \\
\overline{\nu}^{(2)}_{\rm mid}: & \big\{\overline{\nu}^{(2)}_{\rm mid}\big\}, \\
\overline{\nu}^{(2)}_{\rm upp}: & \big\{\mu_0^{(2)} : \mu_0^{(1)}(\{1\}) > z_{\rm mid}\big\}.
\end{array}
$$

The RTPs for $\nu_{\rm low}, \nu_{\rm upp}$ are endogenous, but the RTP corresponding to $\nu_{\rm mid}$ is not.

The higher-level equation

The n-variate map $\mathbf{T}^{(n)}$ is defined even for $n = \infty$,
and $\mathbf{T}^{(\infty)}$ maps $\mathcal{P}_{\mathrm{sym}}(S^{\mathbb{N}_+})$ into itself.

By De Finetti's theorem, $(X_i)_{i\in\mathbb{N}_+}$ have a law in $\mathcal{P}_{\mathrm{sym}}(S^{\mathbb{N}_+})$ if and only if there exists a random probability measure ξ on S such that conditional on ξ, the $(X_i)_{i\in\mathbb{N}_+}$ are i.i.d. with law ξ.

Let $\rho := \mathbb{P}[\xi \in \cdot\,]$ the law of ξ. Then $\rho \in \mathcal{P}(\mathcal{P}(S))$.
In view of this, $\mathcal{P}_{\mathrm{sym}}(S^{\mathbb{N}_+}) \cong \mathcal{P}(\mathcal{P}(S))$.

The map $\mathbf{T}^{(\infty)} : \mathcal{P}_{\mathrm{sym}}(S^{\mathbb{N}_+}) \to \mathcal{P}_{\mathrm{sym}}(S^{\mathbb{N}_+})$
corresponds to a *higher-level map* $\check{\mathbf{T}} : \mathcal{P}(\mathcal{P}(S)) \to \mathcal{P}(\mathcal{P}(S))$.

The higher-level equation

For any measurable map $g : S^k \to S$, define $\check{g} : \mathcal{P}(S)^k \to \mathcal{P}(S)$ by

$$\check{g} := \text{ the law of } g(X_1, \dots, X_k),$$
$$\text{where } (X_1, \dots, X_k) \text{ are independent with laws } \mu_1, \dots, \mu_k.$$

Then

$$\check{\mathsf{T}}(\rho) := \text{ the law of } \check{\gamma}[\boldsymbol{\omega}](\xi_1, \dots, \xi_{\kappa(\boldsymbol{\omega})}),$$

with $\boldsymbol{\omega}$ as before and $\xi_1, \xi_2, \dots$ i.i.d. with law ρ.

Define *n-th moment measures*

$$\rho^{(n)} := \mathbb{E}\big[\underbrace{\xi \otimes \cdots \otimes \xi}_{n \text{ times}}\big] \quad \text{where } \xi \text{ has law } \rho.$$

Proposition [MSS '18] If $(\rho_t)_{t \geq 0}$ solves the *higher-level mean-field equation*, then its n-th moment measures $(\rho_t^{(n)})_{t \geq 0}$ solve the n-variate equation.

The higher-level equation

Equip $\mathcal{P}(\mathcal{P}(S))_\nu = \{\rho : \rho^{(1)} = \nu\}$ with the *convex order*

$$\rho_1 \leq_{\mathrm{cv}} \rho_2 \quad \text{iff} \quad \int \phi \, \mathrm{d}\rho_1 \leq \int \phi \, \mathrm{d}\rho_2 \quad \forall \text{ convex } \phi.$$

[Strassen '65] $\rho_1 \leq_{\mathrm{cv}} \rho_2$ iff there exist a r.v. X and σ-fields $\mathcal{H}_1 \subset \mathcal{H}_2$ s.t. $\rho_i = \mathbb{P}\big[\mathbb{P}[X \in \cdot \,|\mathcal{H}_i] \in \cdot\,\big]$ $(i = 1, 2)$.

Define $\overline{\nu} := \mathbb{P}[\delta_X \in \cdot\,]$ with $\mathbb{P}[X \in \cdot\,] = \nu$. Maximal and minimal elements:

$$\delta_\nu \leq_{\mathrm{cv}} \rho \leq_{\mathrm{cv}} \overline{\nu} \qquad \forall \rho \in \mathcal{P}(\mathcal{P}(S))_\nu.$$

Proposition [MSS '18] $\check{\mathsf{T}}$ is monotone w.r.t. the convex order. There exists a solution $\underline{\nu}$ to the higher-level RDE s.t.

$$\check{\mathsf{T}}^n(\delta_\nu) \underset{n\to\infty}{\Longrightarrow} \underline{\nu} \quad \text{and} \quad \check{\mathsf{T}}_t(\delta_\nu) \underset{t\to\infty}{\Longrightarrow} \underline{\nu}$$

and any solution $\rho \in \mathcal{P}(\mathcal{P}(S))_\nu$ to the higher-level RDE satisfies

$$\underline{\nu} \leq_{\mathrm{cv}} \rho \leq_{\mathrm{cv}} \overline{\nu} \qquad \forall \rho \in \mathcal{P}(\mathcal{P}(S))_\nu.$$

The higher-level equation

Proposition [MSS '18]
Let $(\boldsymbol{\omega}_{\mathbf{i}}, \mathbf{X}_{\mathbf{i}})_{\mathbf{i}\in\mathbb{T}}$ be the RTP corresponding to γ and ν. Set

$$\xi_{\mathbf{i}} := \mathbb{P}\big[X_{\mathbf{i}} \in \ \cdot \,|\, (\boldsymbol{\omega}_{\mathbf{ij}})_{\mathbf{j}\in\mathbb{T}}\big].$$

Then $(\boldsymbol{\omega}_{\mathbf{i}}, \xi_{\mathbf{i}})_{\mathbf{i}\in\mathbb{T}}$ is an RTP corresponding to $\check{\gamma}$ and $\underline{\nu}$.
Also, $(\boldsymbol{\omega}_{\mathbf{i}}, \delta_{X_{\mathbf{i}}})_{\mathbf{i}\in\mathbb{T}}$ is an RTP corresponding to $\check{\gamma}$ and $\overline{\nu}$.

Corollary The RTP is endogenous iff $\underline{\nu} = \overline{\nu}$.

The higher-level equation

Theorem [Mach, Sturm, S. '18] One has

$$\underline{\nu}_{\rm low} = \overline{\nu}_{\rm low}, \quad \underline{\nu}_{\rm upp} = \overline{\nu}_{\rm upp}, \quad \text{but} \quad \underline{\nu}_{\rm mid} \neq \overline{\nu}_{\rm mid}.$$

These are all solutions to the higher-level RDE.
Any solution $(\rho_t)_{t\geq 0}$ to the higher-level mean-field equation converges to one of these fixed points.
The domains of attraction are:

$$\begin{aligned}
\overline{\nu}_{\rm low}: &\quad \big\{\rho_0 : \rho_0^{(1)}(\{1\}) < z_{\rm mid}\big\},\\
\underline{\nu}_{\rm mid}: &\quad \big\{\rho_0 : \rho_0^{(1)}(\{1\}) = z_{\rm mid},\ \rho_0 \neq \overline{\nu}_{\rm mid}\big\},\\
\overline{\nu}_{\rm mid}: &\quad \big\{\overline{\nu}_{\rm mid}\big\},\\
\overline{\nu}_{\rm upp}: &\quad \big\{\rho_0 : \rho_0^{(1)}(\{1\}) > z_{\rm mid}\big\}.
\end{aligned}$$

The higher-level equation

The map $\mu \mapsto \mu(\{1\})$ defines a bijection $\mathcal{P}(\{0,1\}) \cong [0,1]$, and hence $\mathcal{P}(\mathcal{P}(\{0,1\})) \cong \mathcal{P}[0,1]$.

Then the higher-level RDE takes the form

$$\eta \stackrel{\mathrm{d}}{=} \chi \cdot \big(\eta_1 + (1-\eta_1)\eta_2\eta_3\big),$$

where η takes values in $[0,1]$, η_1, η_2, η_3 are independent copies of η and χ is an independent Bernoulli r.v. with $\mathbb{P}[\chi = 1] = \alpha/(\alpha+1)$.

This RDE has three "trivial" solutions

$$\overline{\nu}_{\ldots} = (1 - z_{\ldots})\delta_0 + z_{\ldots}\delta_1 \qquad (\ldots = \mathrm{low}, \mathrm{mid}, \mathrm{upp}),$$

and a nontrivial solution

$$\underline{\nu}_{\mathrm{mid}} = \lim_{n\to\infty} \check{\mathsf{T}}^n(\delta_{z_{\mathrm{mid}}}).$$

Numerical results

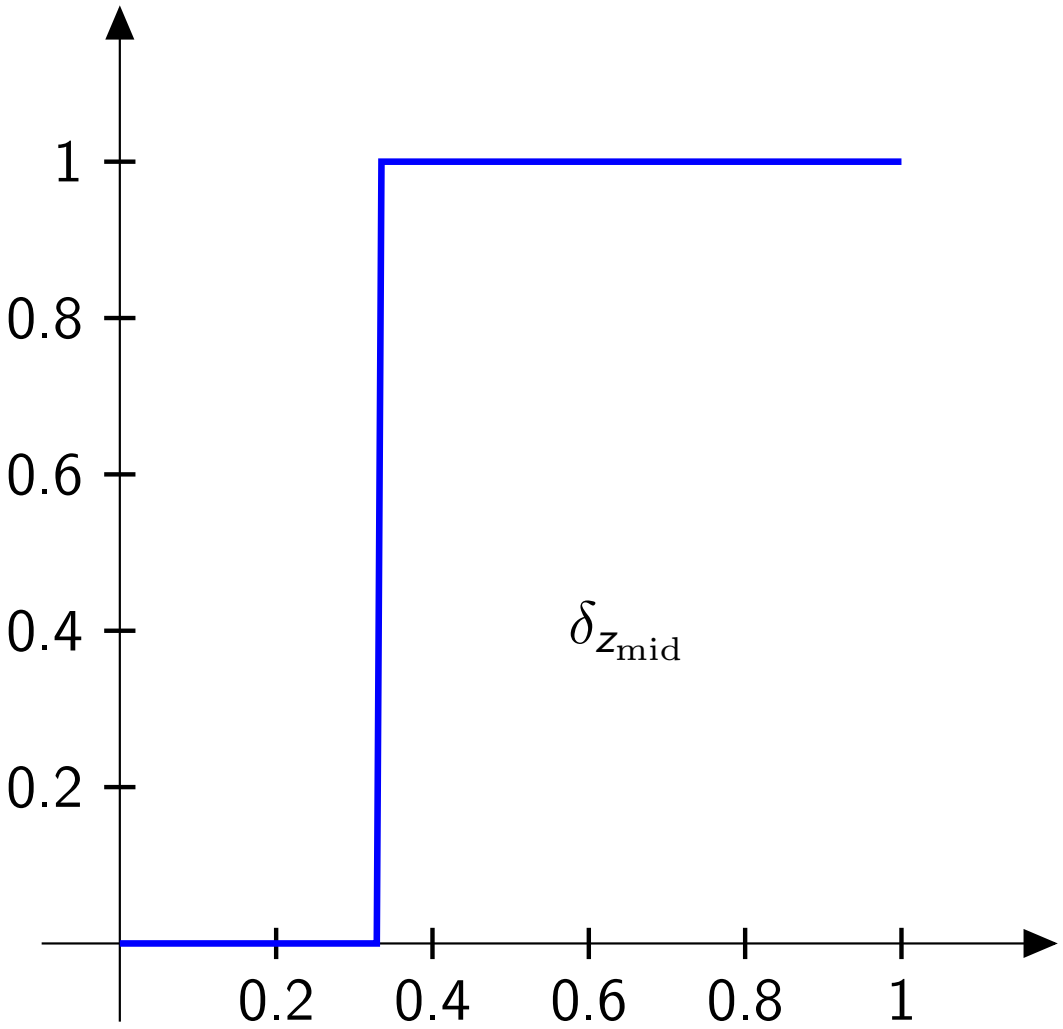

Numerical results

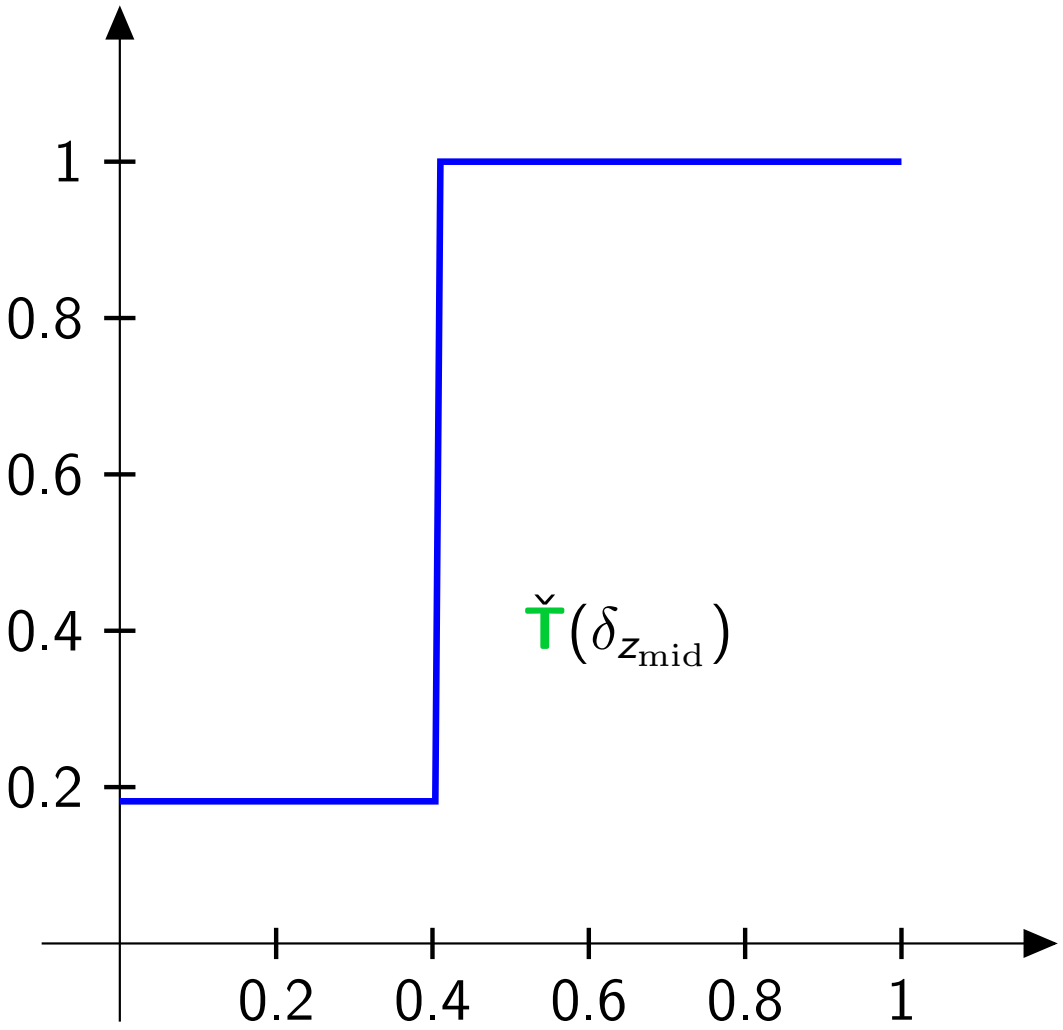

Numerical results

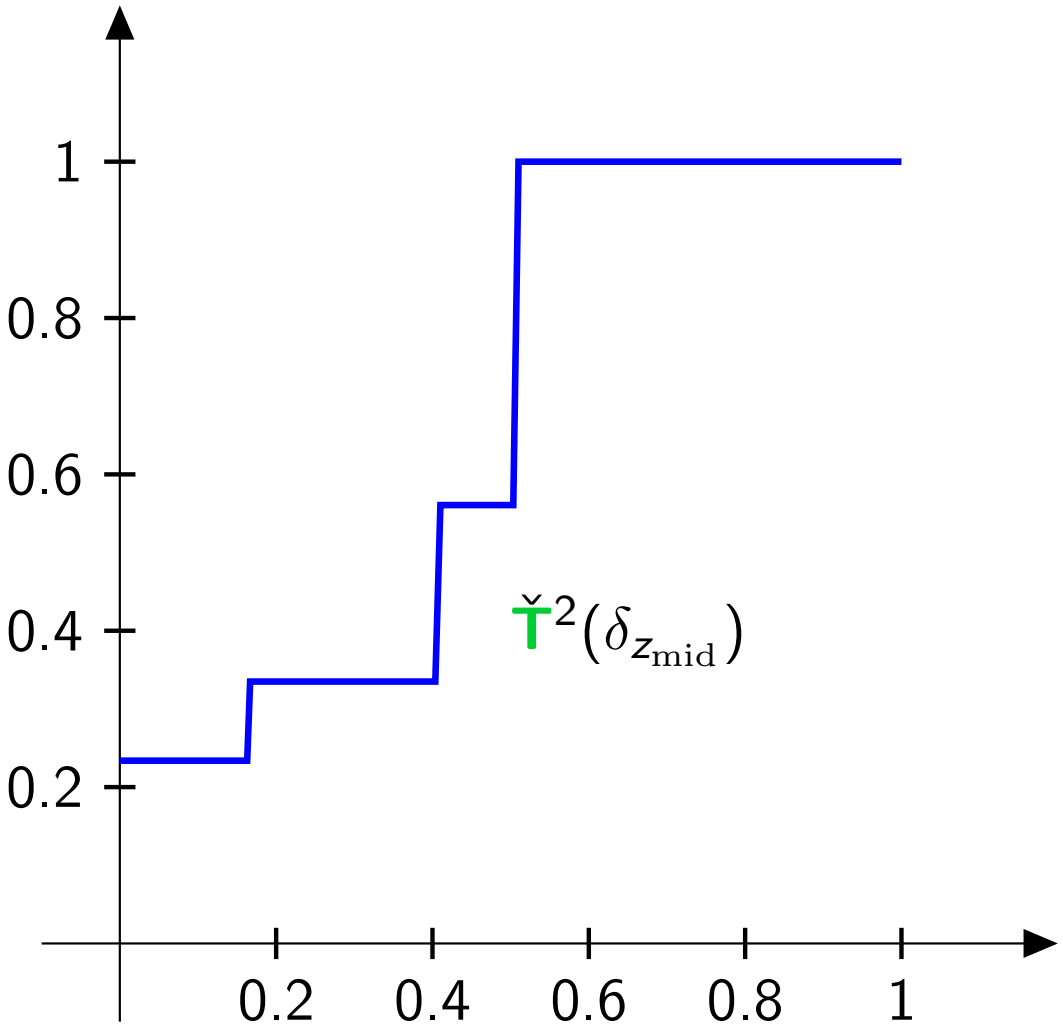

Numerical results

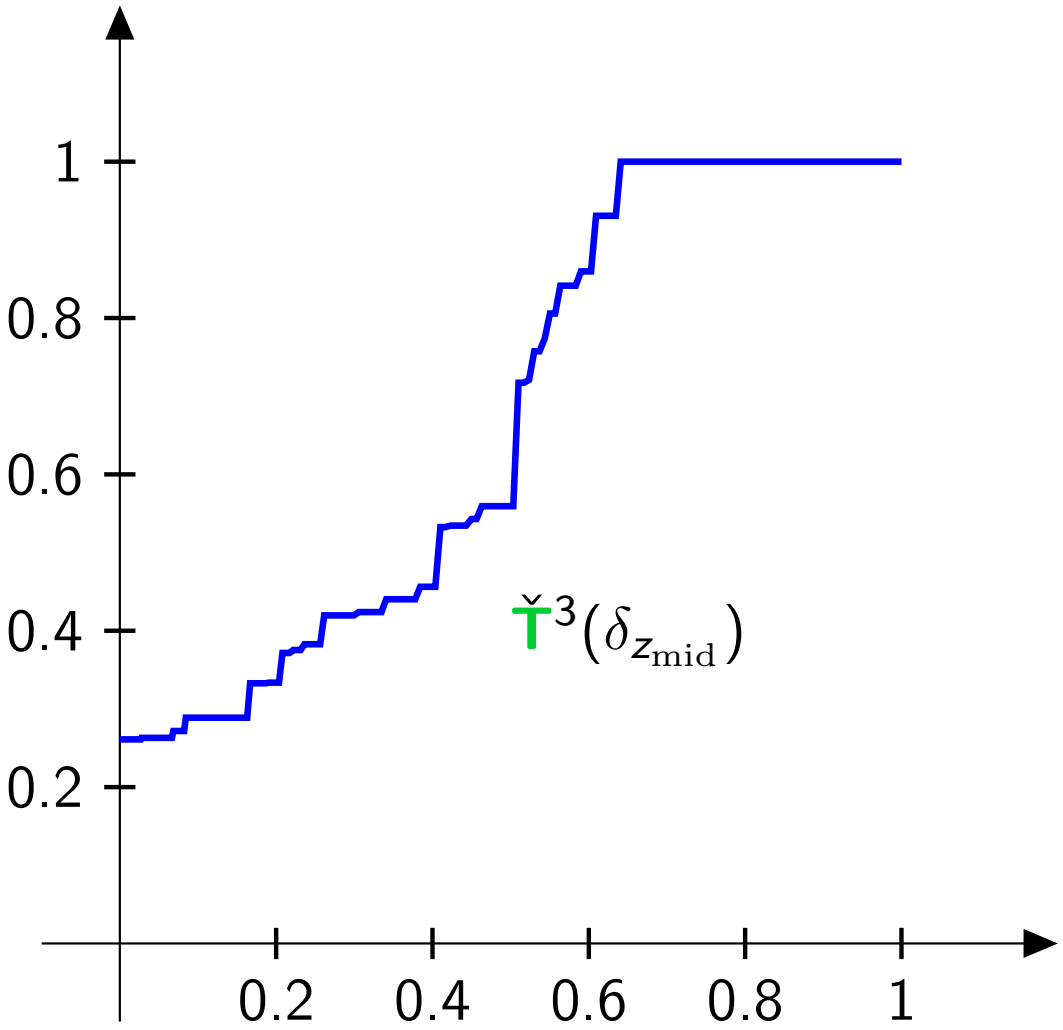

Numerical results

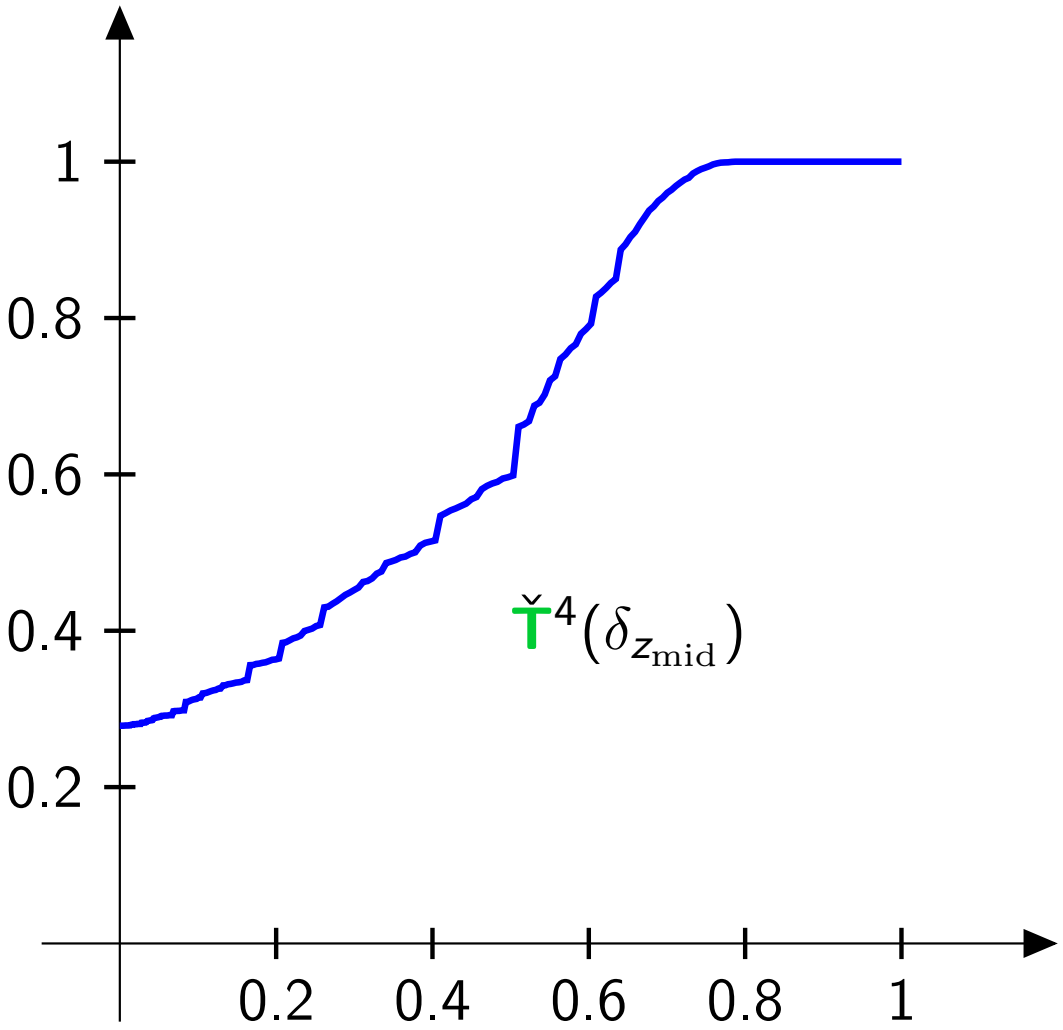

Numerical results

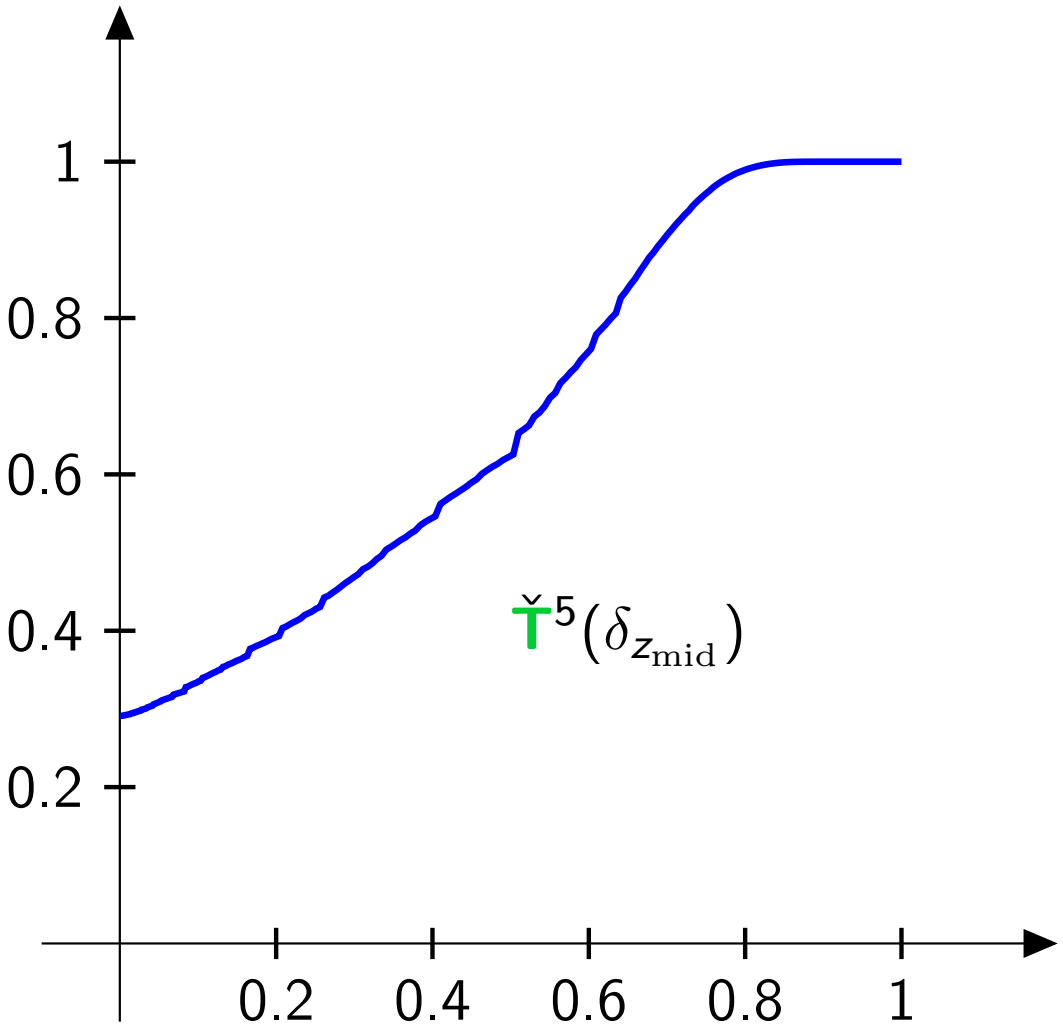

Numerical results

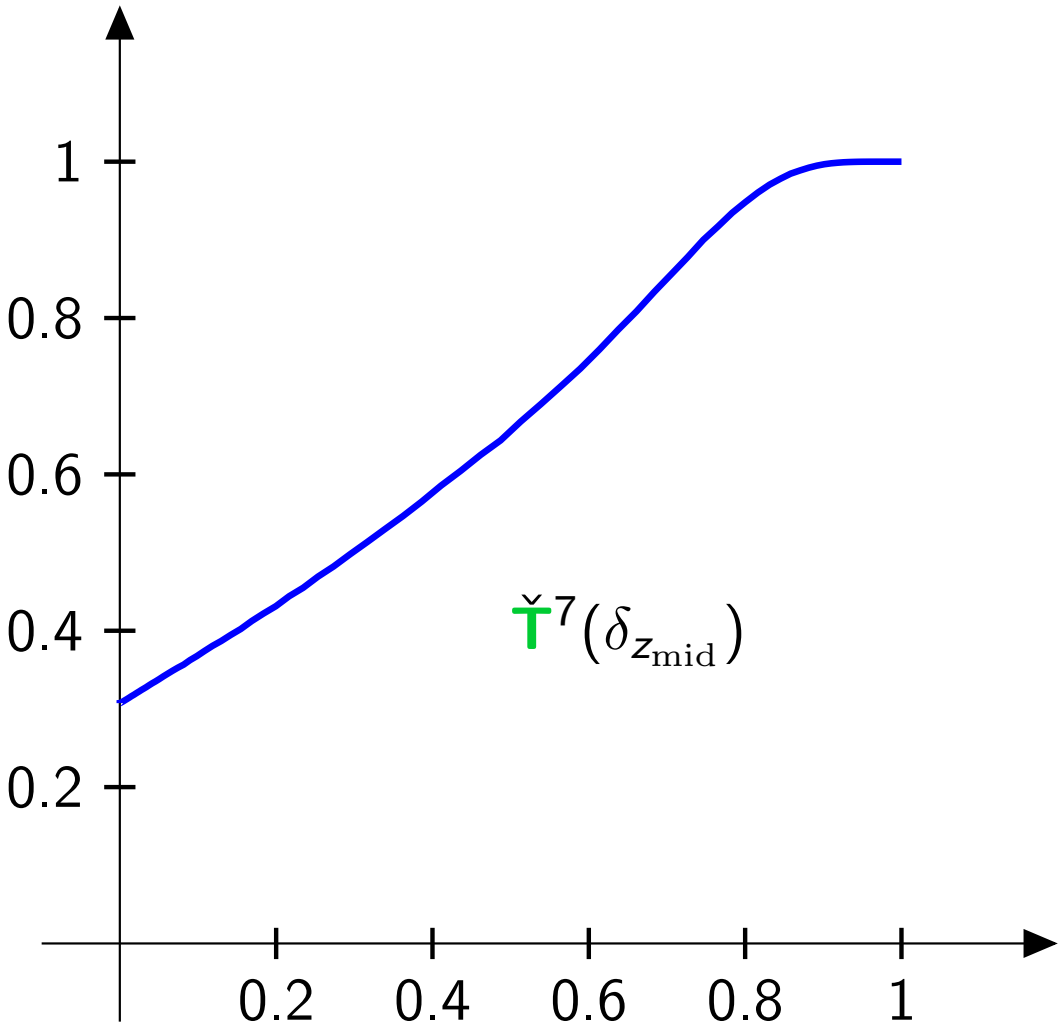

Numerical results

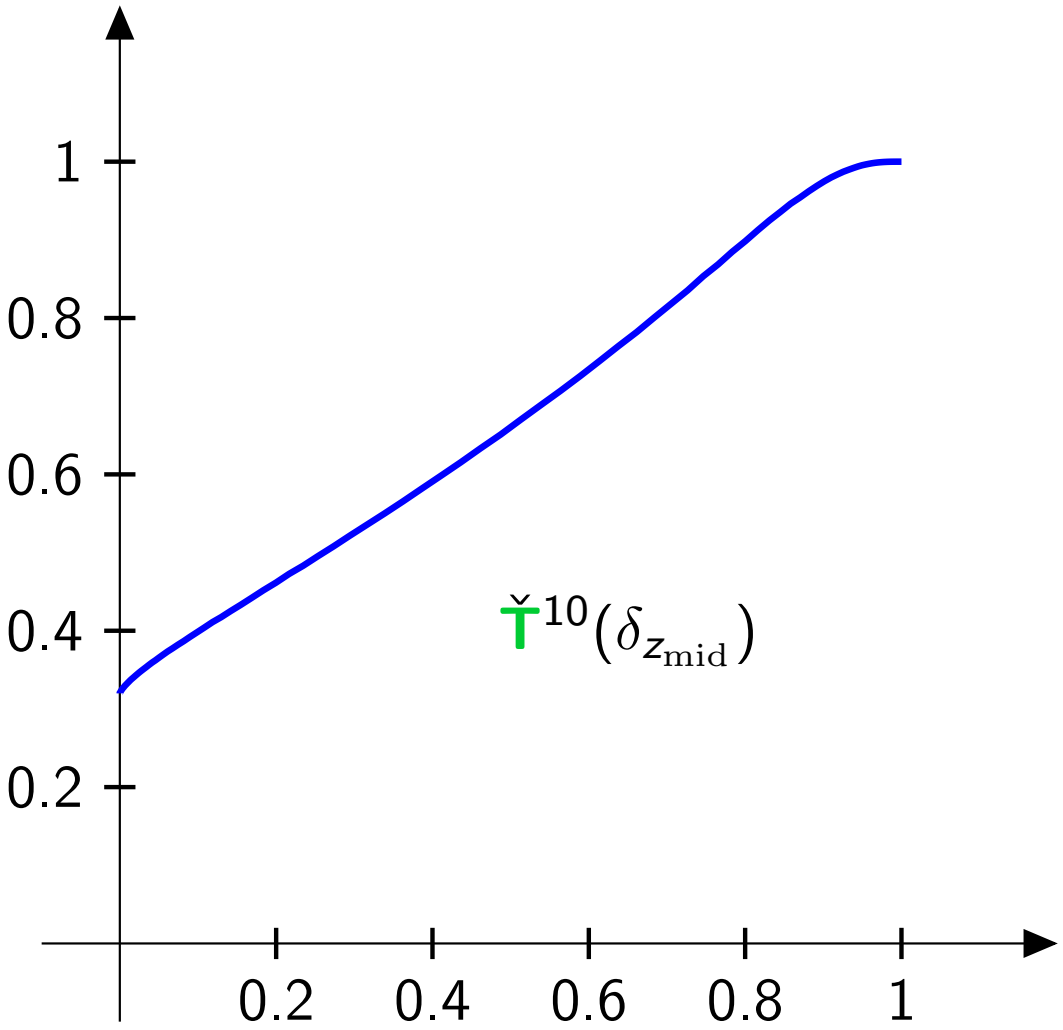

Numerical results

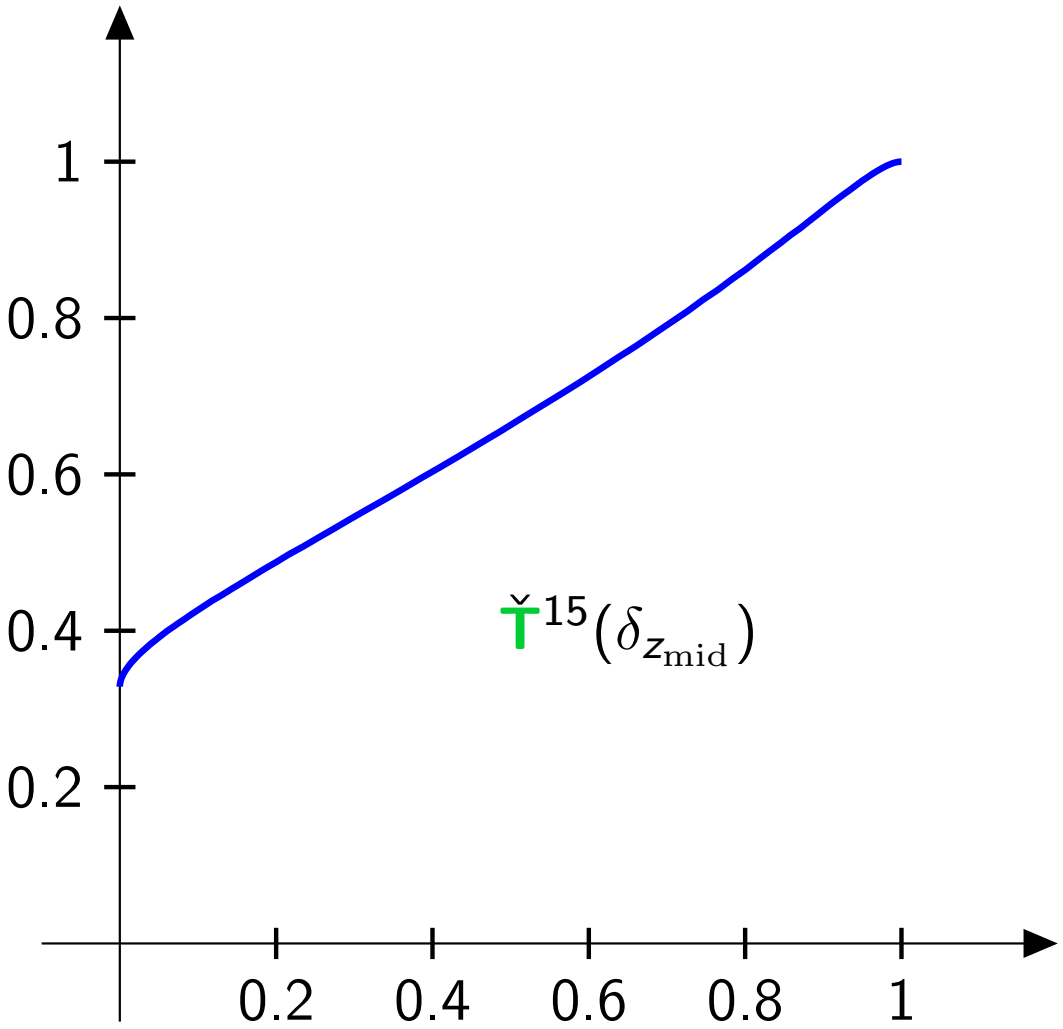

Numerical results

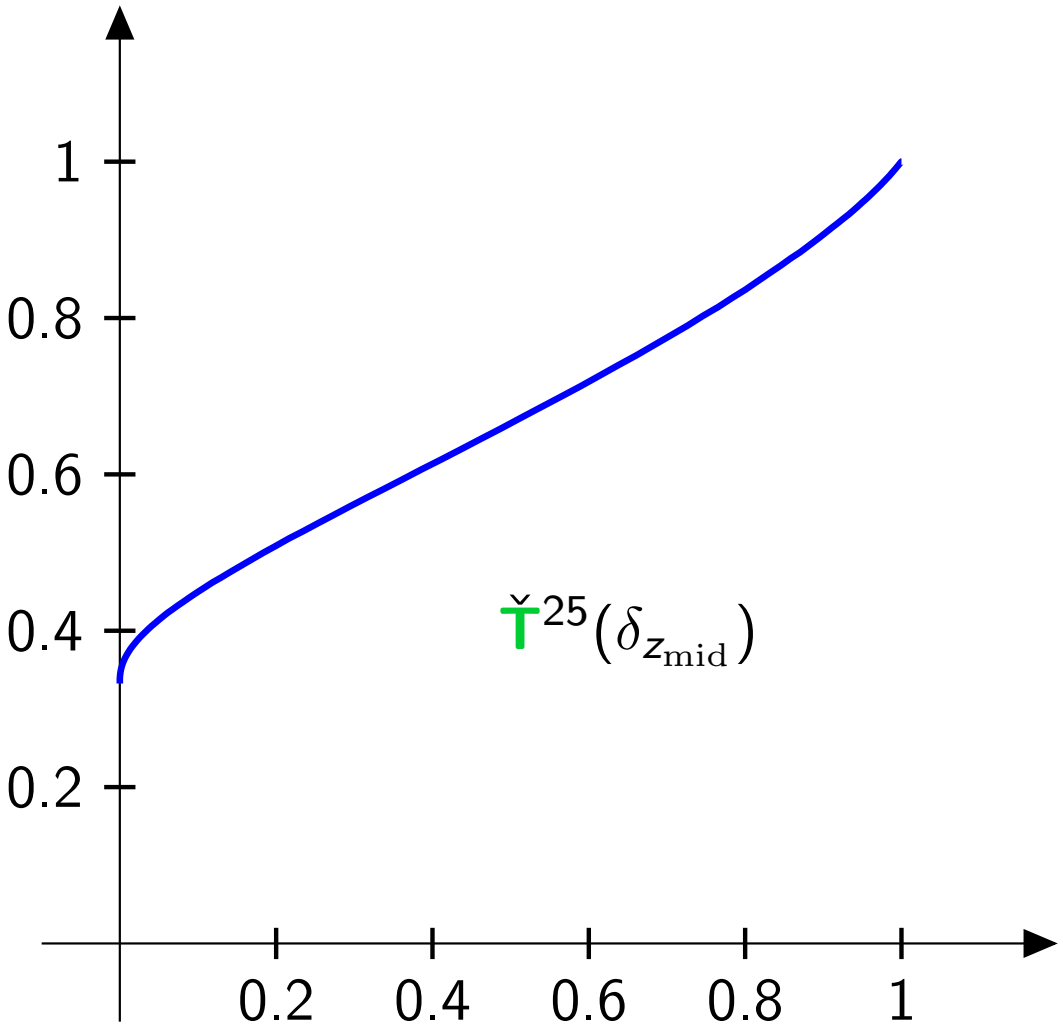

Numerical results

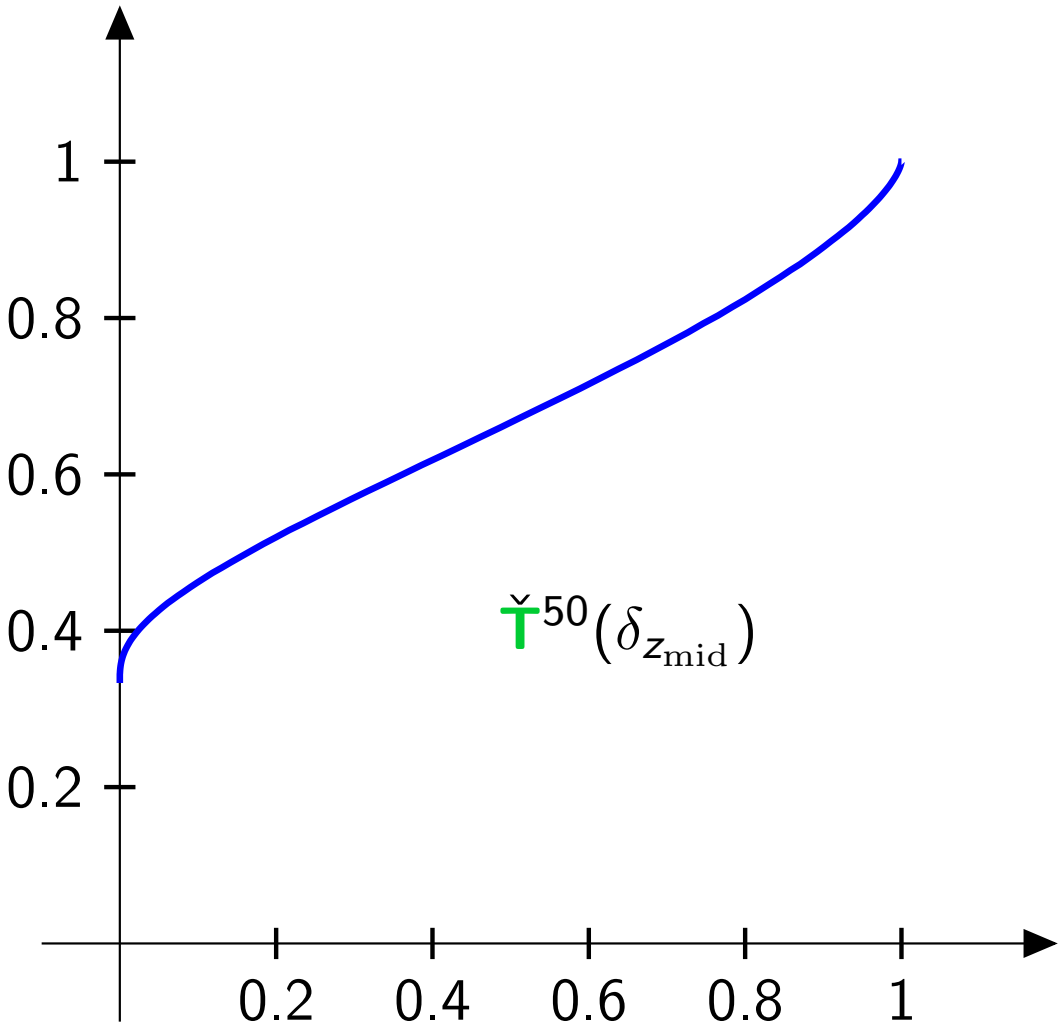

Numerical results

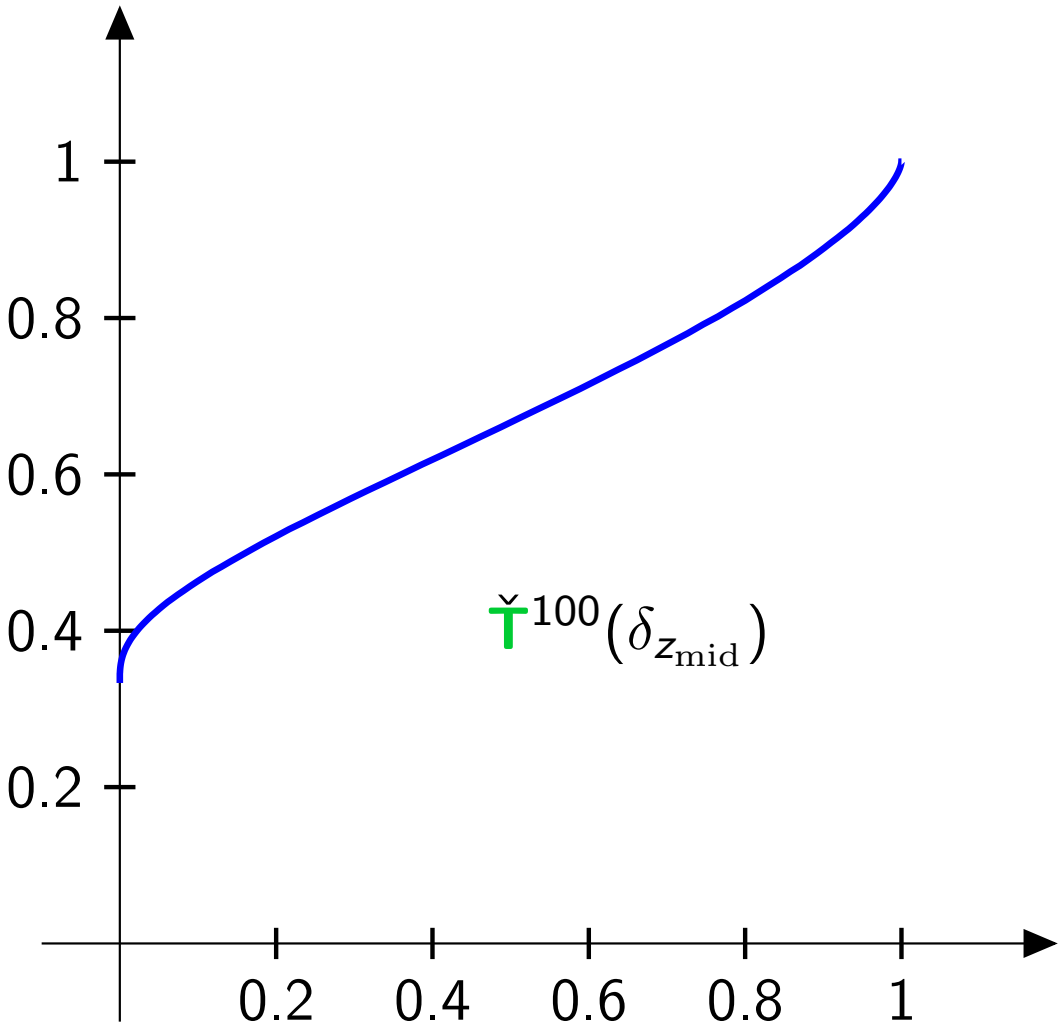

Numerical results

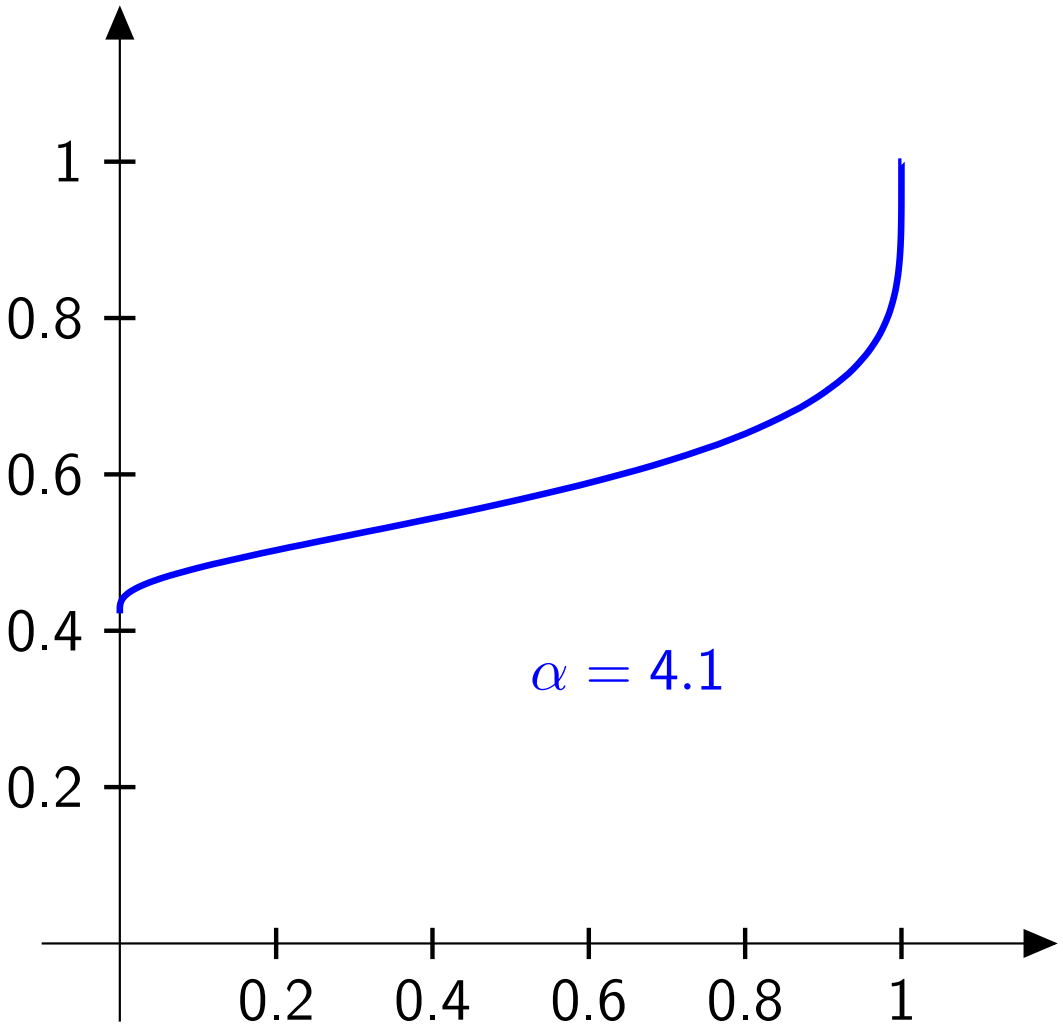

Numerical results

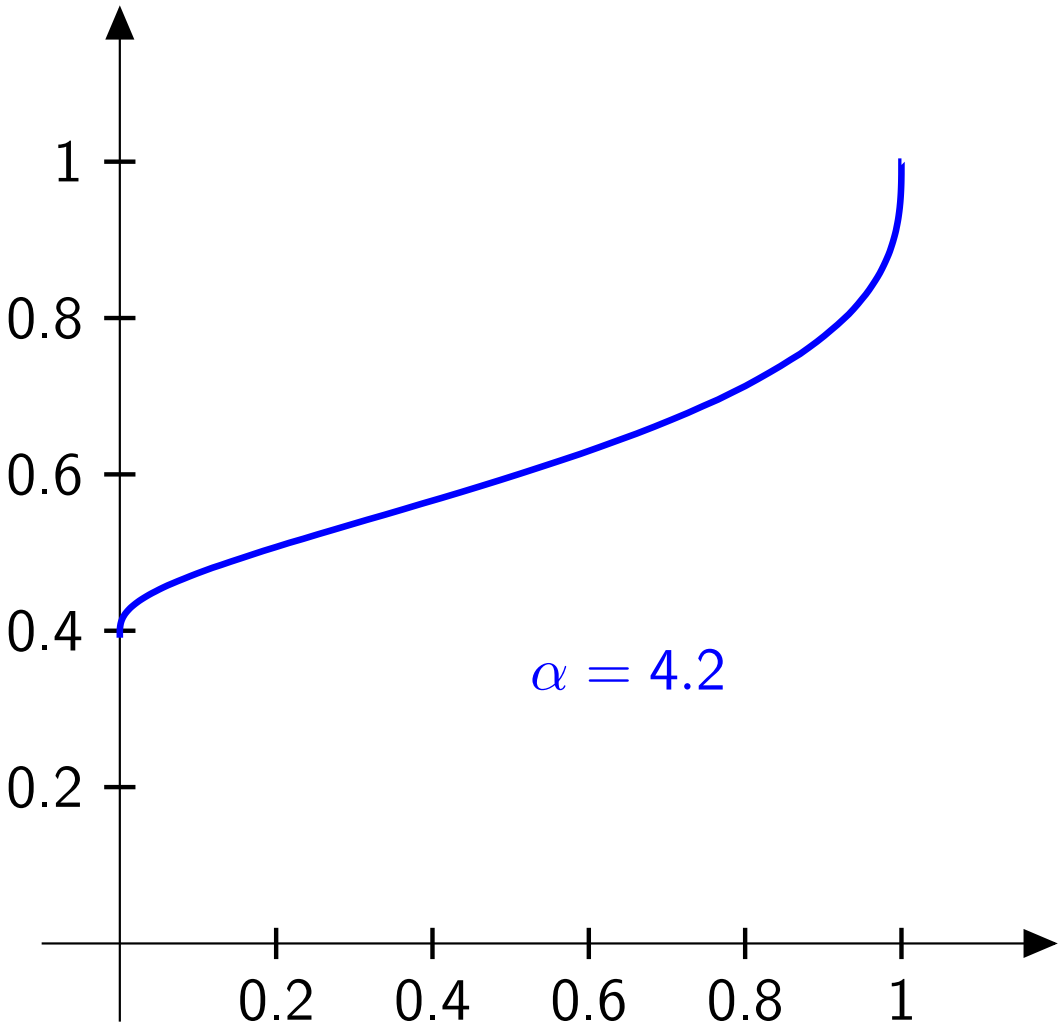

Numerical results

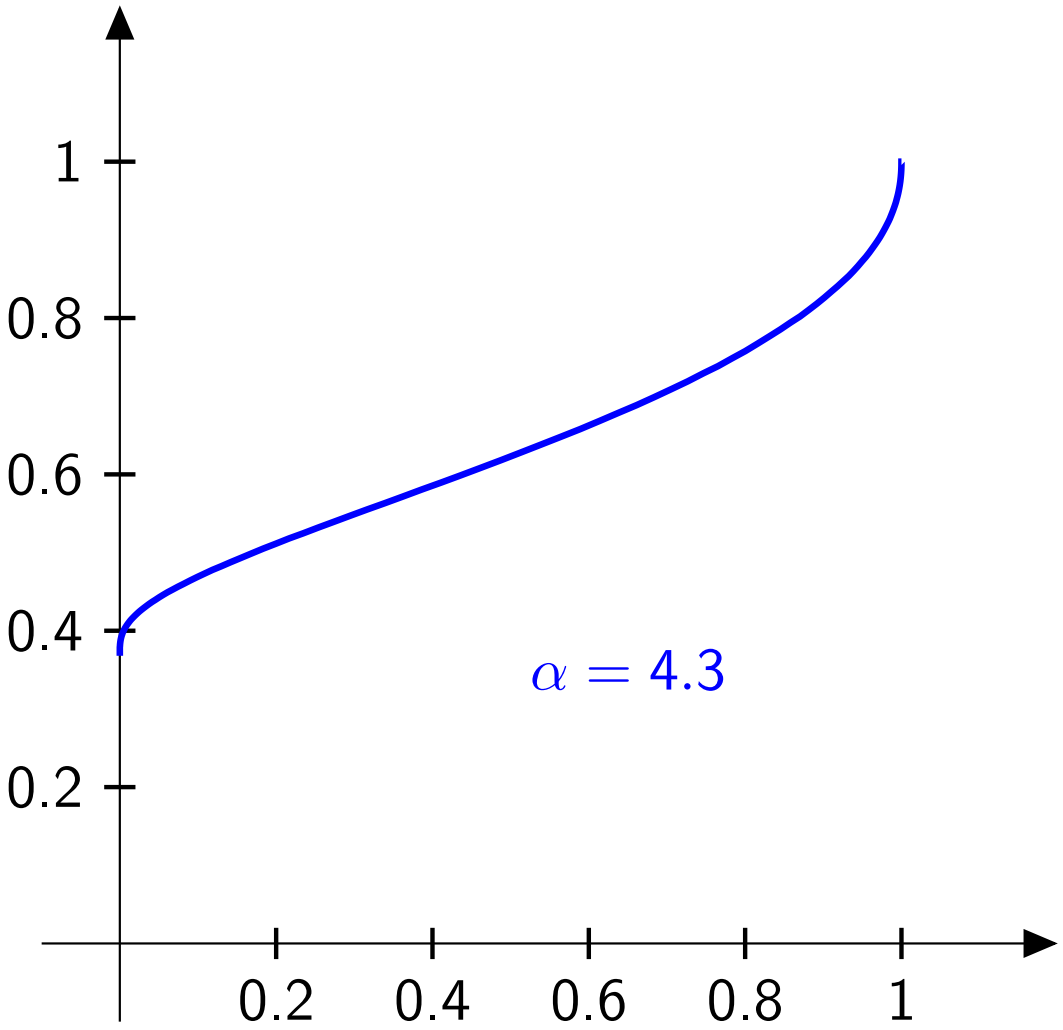

Numerical results

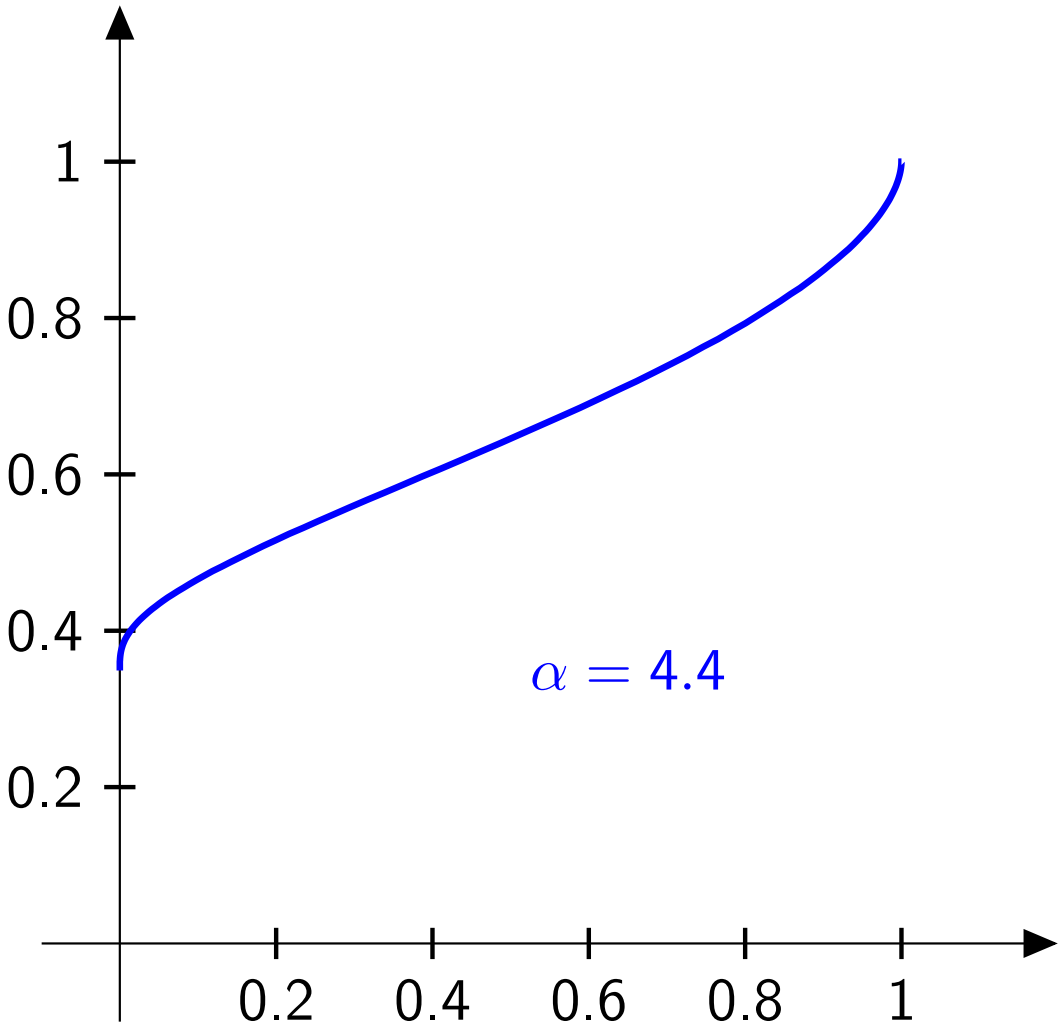

Numerical results

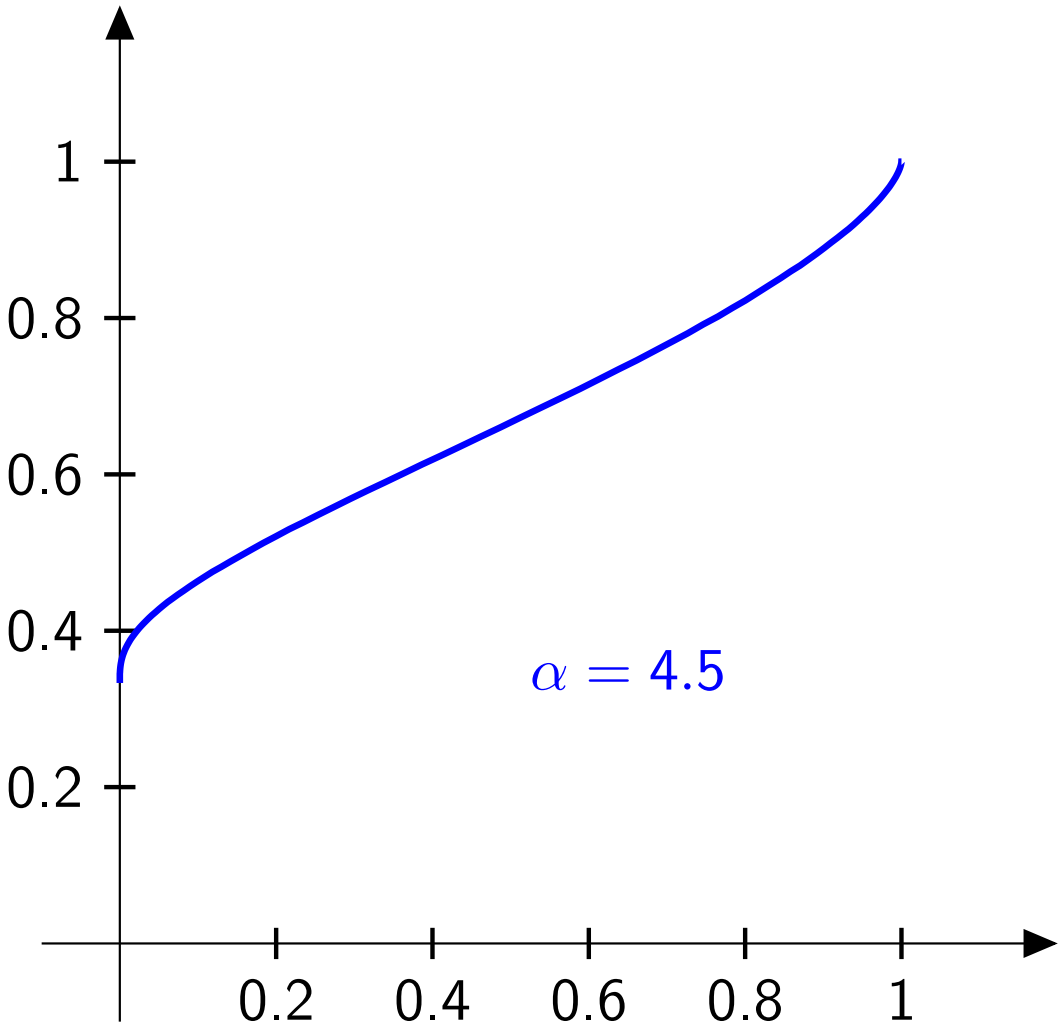

Numerical results

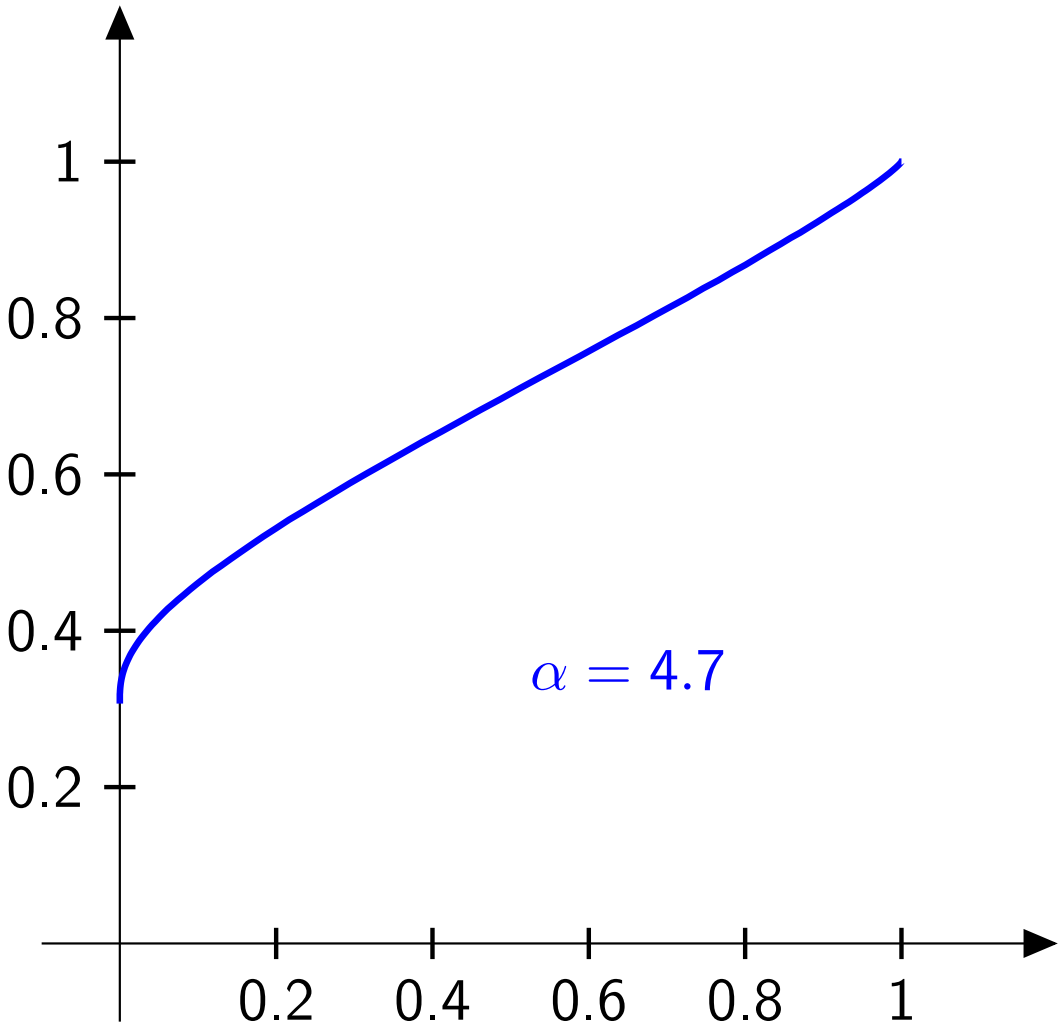

Numerical results

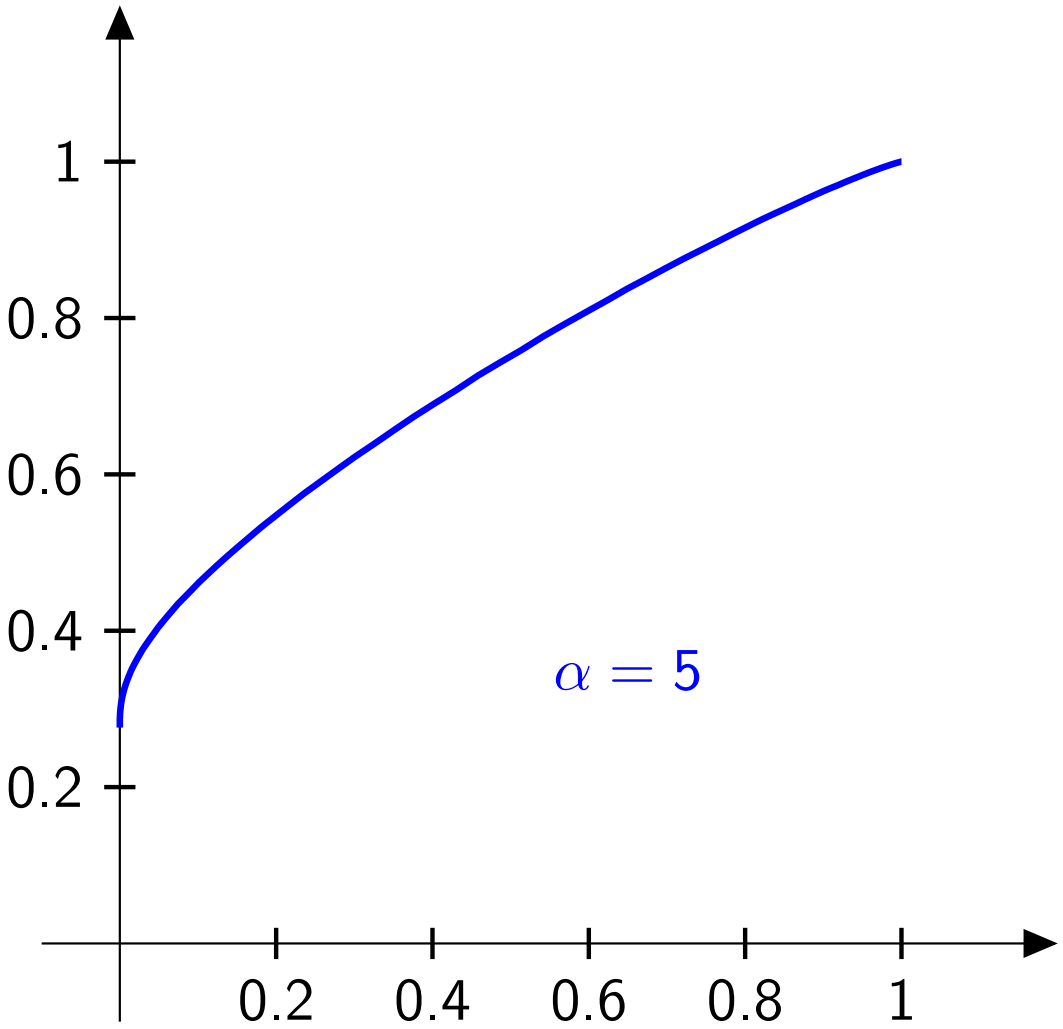

Numerical results

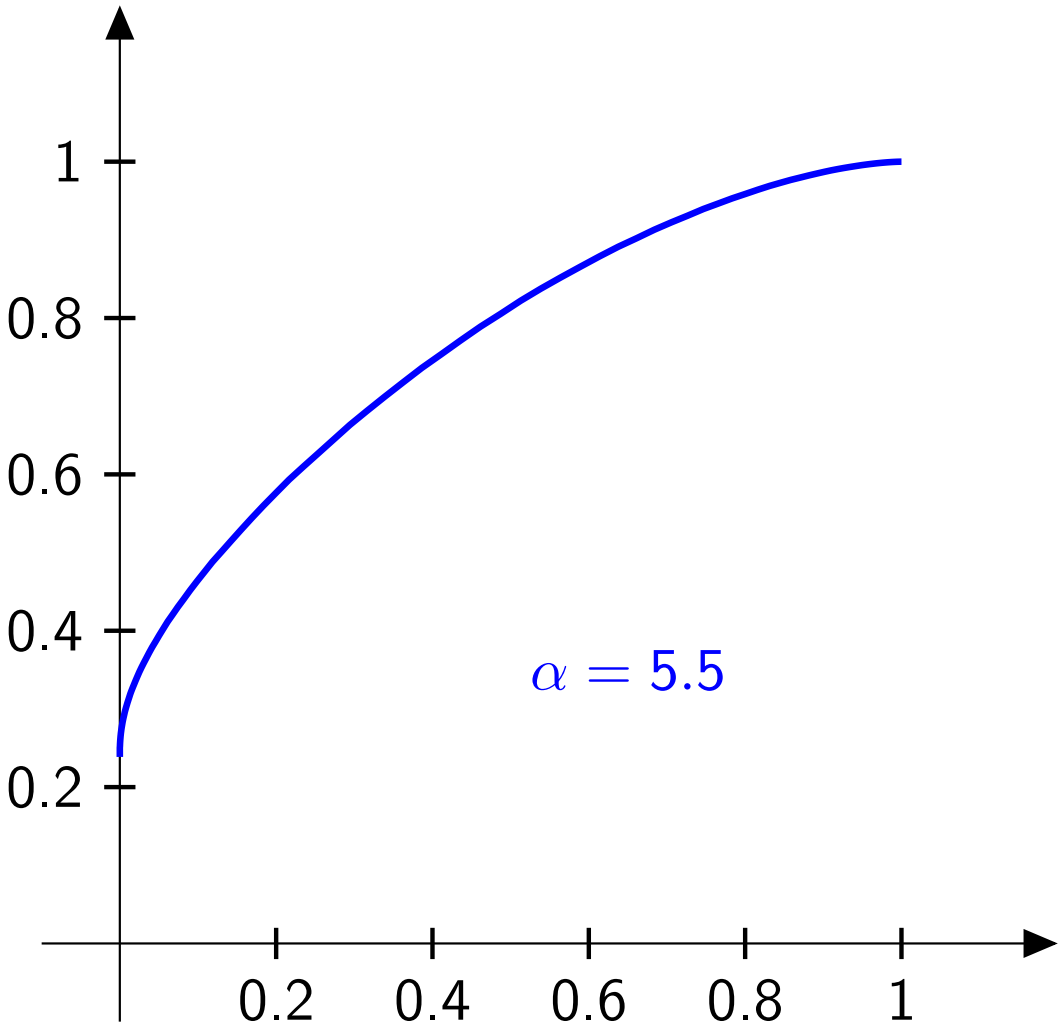

Numerical results

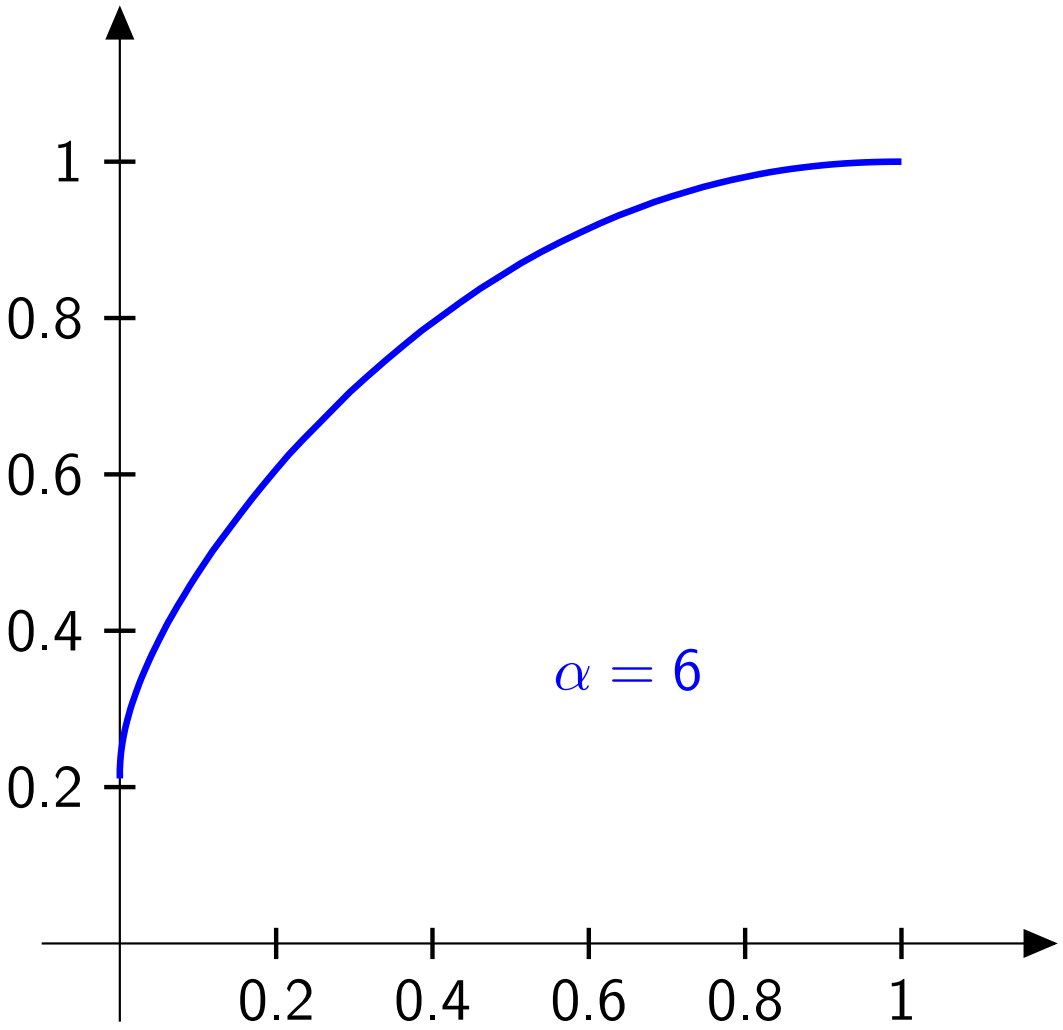

Numerical results

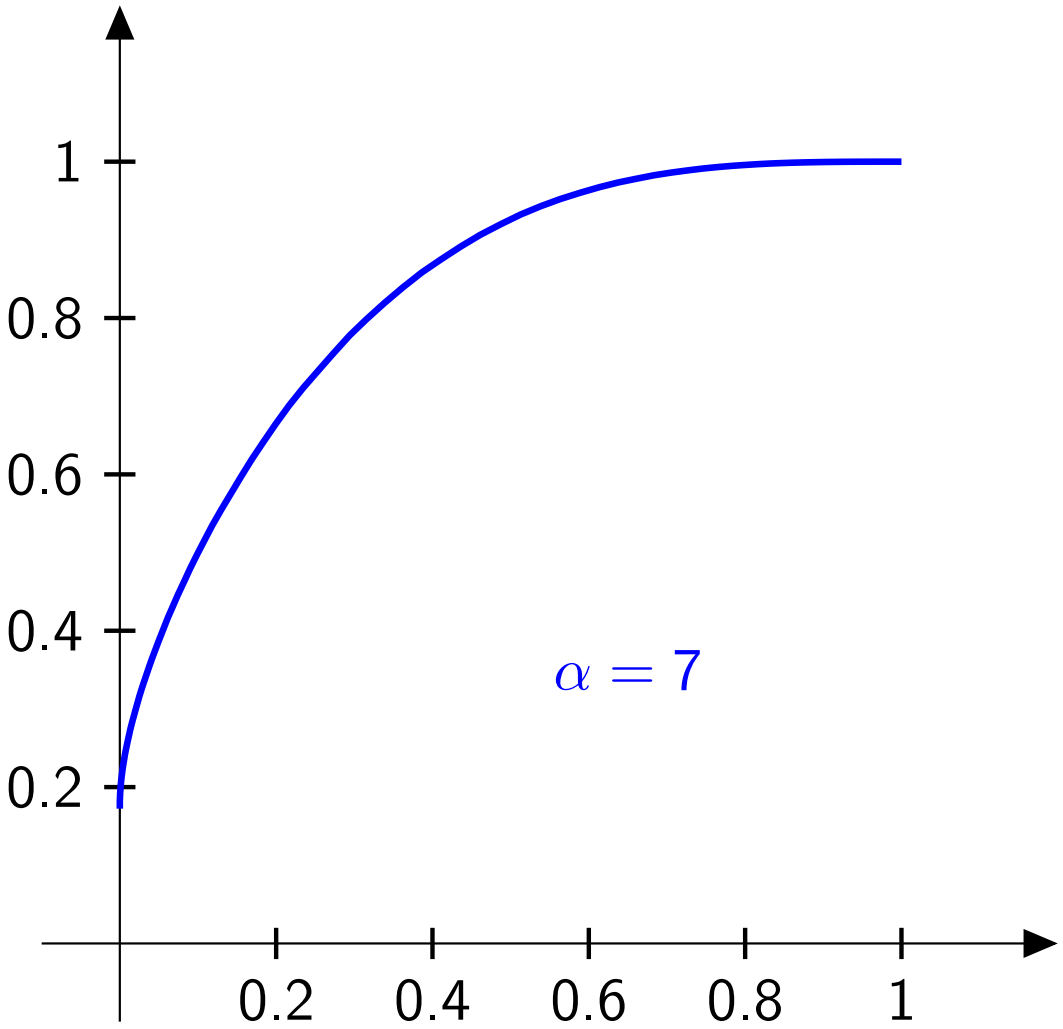

Numerical results

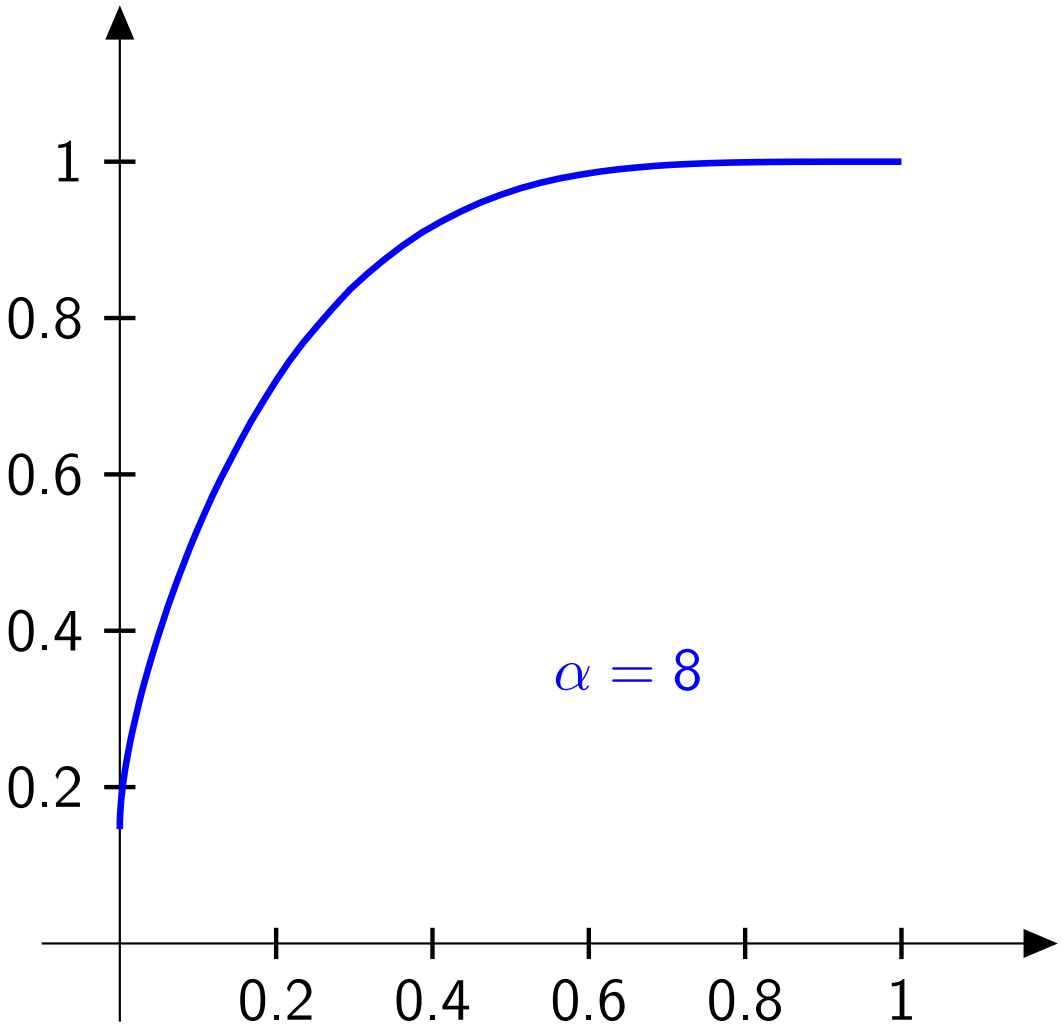

Numerical results

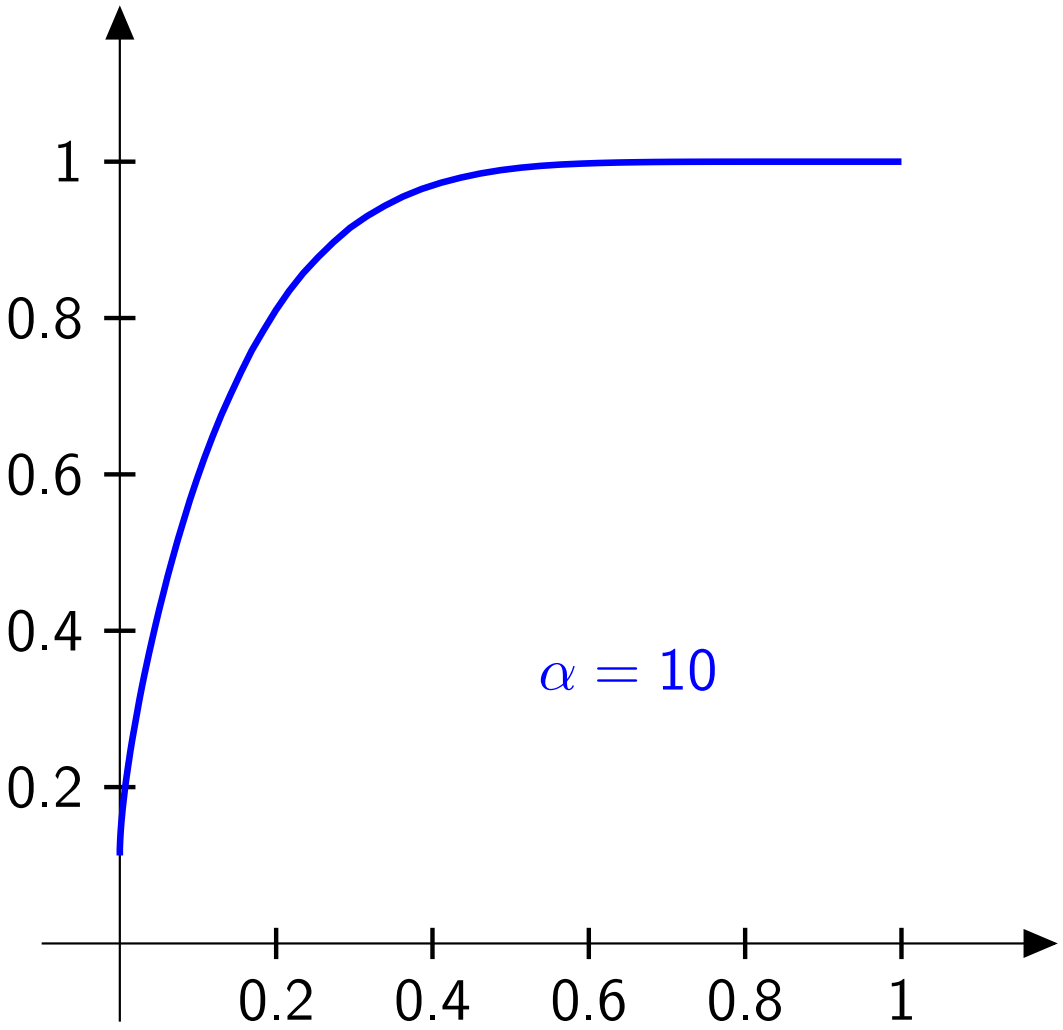

Numerical results

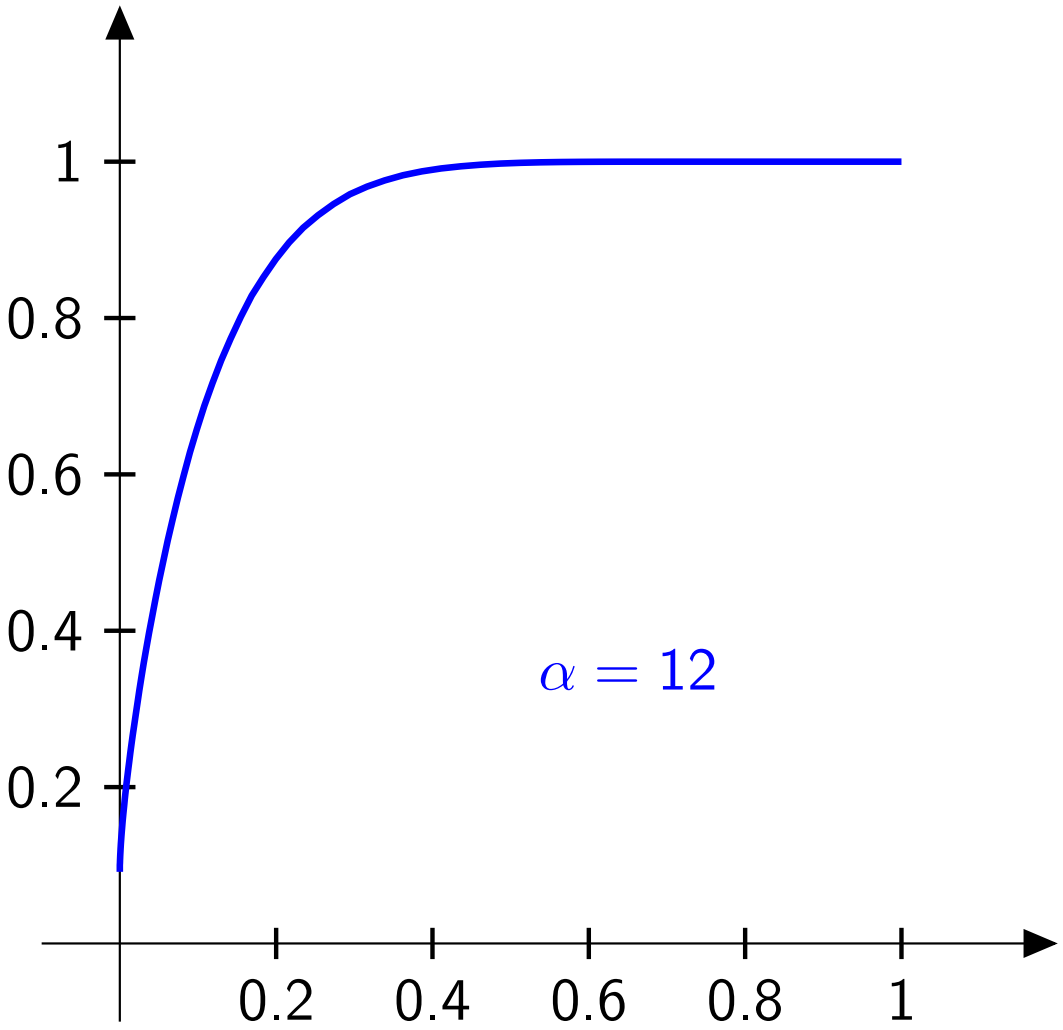

Numerical results